AKAI

DVD PLAYER

Model:
DV-P3470S/SK
DV-P3570S/SK/DS/DSK/DPSK

SERVICE MANUAL

www.akai.ru

CONTENTS

1. PRECAUTIONS----------1
1-1 SAFETY PRECAUTIONS----------1
1-2 SERVICING PRECAUTIONS----------2
1-2-1 General Serving Precautions----------2
1-2-2 Insulation Checking Procedure----------3
1-3 ESD PRECAUTIONS----------3
2. REFERENCE INFORMATION----------4
2-1 COMPONENT DESCRIPTIONS----------4
2-1-1 DVD ATAPI Loader----------4
2-1-2 NTSC/PAL Digital Video Encoder (CS4955)----------6
2-1-3 DVD Processor Chip (MT1369AE)----------8
2-1-4 8-Pin, 24-Bit, 96kHz Stereo D/A CONVERTER (WM8720)---------- 17
2-1-5 Serial EEPROM, 2K (256 x 8) (24C16,ST-S08)---------- 20
2-1-6 8-Megabit (512 x 8) FLASH RAM (29F800)---------- 20
2-1-7 512K X 16 Bit X 2 Banks Synchronous DRAM (A43L0616)---------- 23
3. PRODUCT SPECIFICATIONS---------- 26
4. OPERATING INSTRUCTIONS---------- **ОШИБКА! ЗАКЛАДКА НЕ ОПРЕДЕЛЕНА.**
4-1 BASIC CONNECTIONS---------- **ОШИБКА! ЗАКЛАДКА НЕ ОПРЕДЕЛЕНА.**
4-2 Selecting Video Mode----------24
4-2 Selecting the desired DVD Menu item---------- 25
4-4 Selecting the desired MP3 folder----------26
4-5 Selecting the desired MP3 title---------- 27
4-6 Searching----------28
4-7 Resume Play----------29
4-10 Selecting Subtitle Language----------31
4-11 Selecting Angle---------- -32
5. DISASSEMBLY AND REASSEMBLY---------- 27
6. TROUBLESHOOTING---------- 28
7. ELECTRICAL PART LIST---------- 29
8. BLOCK DIAGRAM---------- 35
9. CIRCUIT DIAGRAMS---------- 36
10. WIRING DIAGRAM---------- 44

1-1 Safety Precautions

1) Before returning an instrument to the customer, always make a safety check of the entire instrument, including, but not limited to, the following items:

(1) Be sure that no built-in protective devices are defective or have been defeated during servicing.
(1) Protective shields are provided to protect both the technician and the customer. Correctly replace all missing protective shields, including any remove for servicing convenience.
(2) When reinstalling the chassis and/or other assembly in the cabinet, be sure to put back in place all protective devices, including, but not limited to, nonmetallic control knobs, insulating fish papers, adjustment and compartment covers/shields, and isolation resistor/capacitor networks. Do not operate this instrument or permit it to be operated without all protective devices correctly installed and functioning.

(2) Be sure that there are no cabinet opening through which adults or children might be able to insert their fingers and contact a hazardous voltage. Such openings include, but are not limited to, excessively wide cabinet ventilation slots, and an improperly fitted and/or incorrectly secured cabinet back cover.

(3) Leakage Current Hot Check-With the instrument completely reassembled, plug the AC line cord directly into a 120V AC outlet. (Do not use an isolation transformer during this test.) Use a leakage current tester or a metering system that complies with American National Standards institute (ANSI) C101.1 Leakage.

Current for Appliances and underwriters Laboratories (UL) 1270 (40.7). With the instrument's AC switch first in the ON position and then in the OFF position, measure from a known earth ground (metal water pipe, conduit, etc.) to all exposed metal parts of the instrument (antennas, handle brackets, metal cabinets, screwheads, metallic overlays, control shafts, etc.), especially and exposed metal parts that offer an electrical return path to the chassis.
Any current measured must not exceed 0.5mA.
Reverse the instrument power cord plug in the outlet and repeat the test.

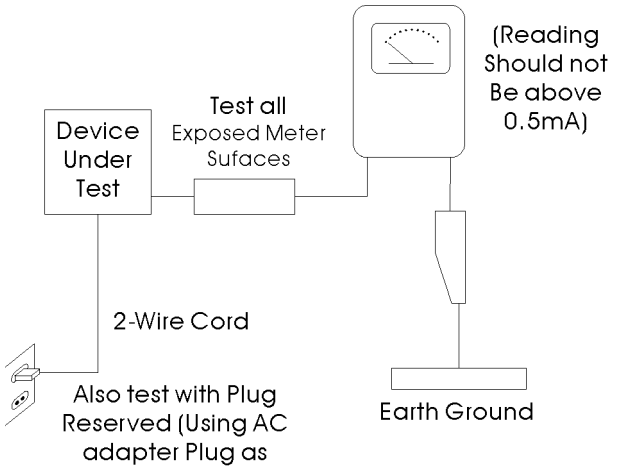

AC Leakage Test

Any measurements not within the limits specified herein indicate a potential shock hazard that must be eliminated before returning the instrument to the customer.

(4) Insulation Resistance Test Cold Check-(1) Unplug the power supply cord and connect a jumper wore between the two prongs of the plug. (2) Turn on the power switch of the instrument. (3) Measure the resistance with an ohmmeter between the jumpered AC plug and all exposed metallic cabinet parts on the instrument, such as screwheads, antenna, control shafts, handle brackets, etc. When an exposed metallic part has a return path to the chassis, the reading should be between 1 and 5.2 megohm. When there is no return path to the chassis, the reading must be infinite. If the reading is not within the limits specified, there is the possibility of a shock hazard, and the instrument must be re-pared and rechecked before it is returned to the customer.

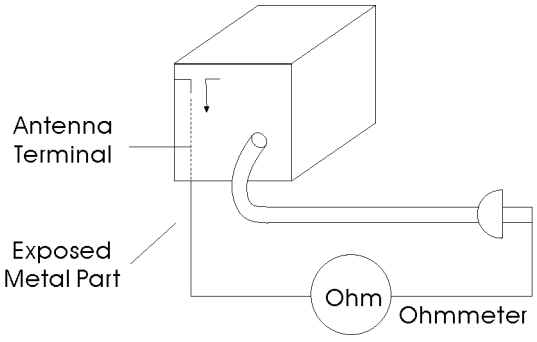

Insulation Resistance Test

2) Read and comply with all caution and safety related

notes non or inside the cabinet, or on the chassis.

3) Design Alteration Warning-Do not alter of add to the mechanical or electrical design of this instrument. Design alterations and additions, including but not limited to, circuit modifications and the addition of items such as auxiliary audio output connections, might alter the safety characteristics of this instrument and create a hazard to the user. Any design alterations or additions will make you, the service, responsible for personal injury or property damage resulting there from.

4) Observe original lead dress. Take extra care to assure correct lead dress in the following areas:
(1) near sharp edges, (2) near thermally hot parts (be sure that leads and components do not touch thermally hot parts), (3) the AC supply, (4) high voltage, and (5) antenna wiring. Always inspect in all areas for pinched, out-of-place, or frayed wiring. Do not change spacing between a component and the printed-circuit board, Check the AC power cord for damage.

5) Components, parts, and/or wiring that appear to have overheated or that are otherwise damaged should be replaced with components, parts and/or wiring that meet original specifications. Additionally determine the cause of overheating and/or damage and, if necessary, take corrective action to remove and potential safety hazard.

6) Product Safety Notice-Some electrical and mechanical parts have special safety-related characteristics which are often not evident from visual inspection, nor can the protection they give necessarily be obtained by replacing them with components rated for higher voltage, wattage, etc. Parts that have special safety characteristics are identified by shading, an (⚠) or a (⚠) on schematics and parts lists. Use of a substitute replacement that does not have the same safety characteristics as the recommended replacement part might created shock, fire and/or other hazards. Product safety is under review continuously and new instructions are issued whenever appropriate.

1-2 Servicing Precautions

CAUTION: Before servicing Instruments covered by this service manual and its supplements, read and follow the Safety Precautions section of this manual.

Note: If unforeseen circument create conflict between the following servicing precautions and any of the safety precautions, always follow the safety precautions. Remember; Safety First

1-2-1 General Serving Precautions

(1) a. Always unplug the instrument's AC power cord from the AC power source before (1) removing or reinstalling any component, circuit board, module or any other instrument assembly. (2) disconnecting any instrument electrical plug or other electrical connection. (3) connecting a test substitute in parallel with an electrolytic capacitor in the instrument.

b. Do not defeat any plug/socket B+ voltage interlocks with which instruments covered by this service manual might be equipped.

c. Do not apply AC power to this instrument and/or any of its electrical assemblies unless all solid-state device heat sinks are correctly installed.

d. Always connect a test instrument's ground lead to the instrument chassis ground before connecting the test instrument positive lead. Always remove the test instrument ground lead last.

Note: Refer to the Safety Precautions section ground lead last.

(2) The service precautions are indicated or printed on the cabinet, chassis or components. When servicing, follow the printed or indicated service precautions and service materials.

(3) The components used in the unit have a specified flame resistance and dielectric strength.
When replacing components, use components which have the same ratings, by (⚠) or by (⚠) in the circuit diagram are important for safety or for the characteristics of the unit. Always replace them with the exact replacement components.

(4) An insulation tube or tape is sometimes used and some components are raised above the printed wiring board for safety. The internal wiring is sometimes clamped to prevent contact with heating components. Install such elements as they were.

(5) After servicing, always check that the removed screws, components, and wiring have been installed correctly

and that the portion around the serviced part has not been damaged and so on. Further, check the insulation between the blades of the attachment plus and accessible conductive parts.

1-2-2 Insulation Checking Procedure

Disconnect the attachment plug from the AC outlet and turn the power ON. Connect the insulation resistance meter (500V) to the blades of the attachment plug. The insulation resistance between each blade of the attachment plug and accessible conductive parts (see note) should be more than 1 Megohm.

Note: Accessible conductive parts include metal panels, input terminals, earphone jacks, etc.

1-3 ESD Precautions

Electrostatically Sensitive Devices (ESD)

Some semiconductor (solid static electricity) devices can be damaged easily by static electricity.
Such compo9nents commonly are called Electrostatically Sensitive Devices (ESD). Examples of typical ESD devices are integrated circuits and some field-effect transistors and semiconductor chip components. The following techniques of component damage caused by static electricity.

(1) immediately before handling any semiconductor components or semiconductor-equipped assembly, drain off any electrostatic charge on your body by touching a known earth ground. Alternatively, obtain and wear a commercially available discharging wrist strap device, which should be removed for potential shock reasons prior to applying power to the unit under test.

(2) after removing an electrical assembly equipped with ESD devices, place the assembly on a conductive surface such as aluminum foil, to prevent electrostatic charge buildup or exposure of the assembly.

(3) Use only a grounded-tip soldering iron to solder or unsolder ESD device.

(4) Use only an anti-static solder removal devices. Some solder removal devices not classified as “anti-static” can generate electrical charges sufficient to damage ESD devices.

(5) Do not use freon-propelled chemicals. These can generate electrical charges sufficient to damage ESD devices.

(6) Do not remove a replacement ESD device from its protective package until immediately before you are ready to install it. (Most replacement ES devices are packaged with leads electrically shorted together by conductive foam, aluminum foil or comparable conductive materials).

(7) Immediately before removing the protective materials from the leads of a replacement ES device touch the protective material to the chassis or circuit assembly into which the device will be installed.

CAUTION: Be sure no power is applied to the chassis or circuit, and observe all other safety precautions.

(8) Minimize bodily motions when handling unpackaged replacement ESD devices. (Otherwise harmless motion such as the brushing together of your clothes fabric or the lifting of your foot from a carpeted floor can generate static electricity sufficient to damage an ESD device).

2. Reference Information

2-1 Component Descriptions

2-1-1 DVD SANYO HD60 PUH

Connector Pin Definition

I/F Signals	I/O Pin #
F-	1
F+	2
T+	3
T-	4
C	5
D	6
CD/DVD	7
RF	8
A	9
B	10
F	11
GND-PD	12
VC	13
VCC	14
E	15
NC	16
VR-CD	17
VR-DVD	18
LD-CD	19
MD	20
HFM	21
NC	22
LD-DVD	23
GND-LD	24

4. Block Diagram

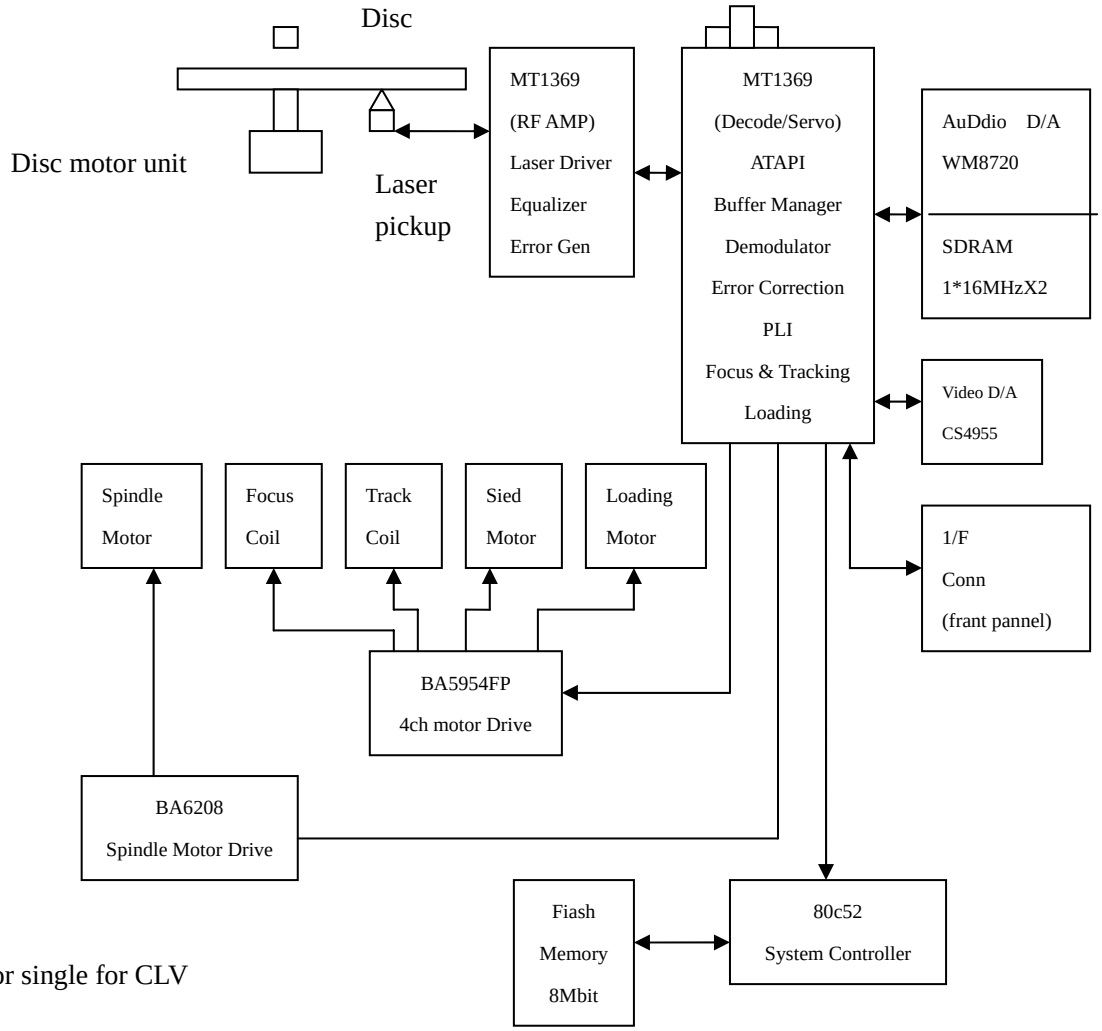

Spindle motor single for CLV

2-1-2 NTSC/PAL Digital Video Encoder (CS4955)

FEATURES

- Six DACs providing simultaneous composite, S-video, and RGB or Component YUV outputs
- Programmable DAC output currents for low imped-ance(37.5Ω) and high impedance(150 Ω)loads.
- Multi-standard support for NTSC-M, NTSC-JAPAN, PAL (B, D, G, H, I, M, N, Combination N)
- ITU R.BT656 input mode supporting EAV/SAV codes and CCIR601 Master/Slave input modes
- Porgrammable HSYNC and VSYNC timing
- Multistandard Teletext(Europe, NABTS, WST) support
- VBI encoding support
- Wide-Screen Signaling (WSS) support, EIA-JCPX1204)
- NTSC closed caption encoder with interrupt
- CS4955 supports Macrovision copy protection Version 7
- Host interface configurable for parallel or I^2C compatible operation
- On-chip voltage reference generator
- +.3.3V or +5V operation, CMOS, low-power modes, tri-state DACs

Ordering Information

CS4955-CQ 48-pin TQFP

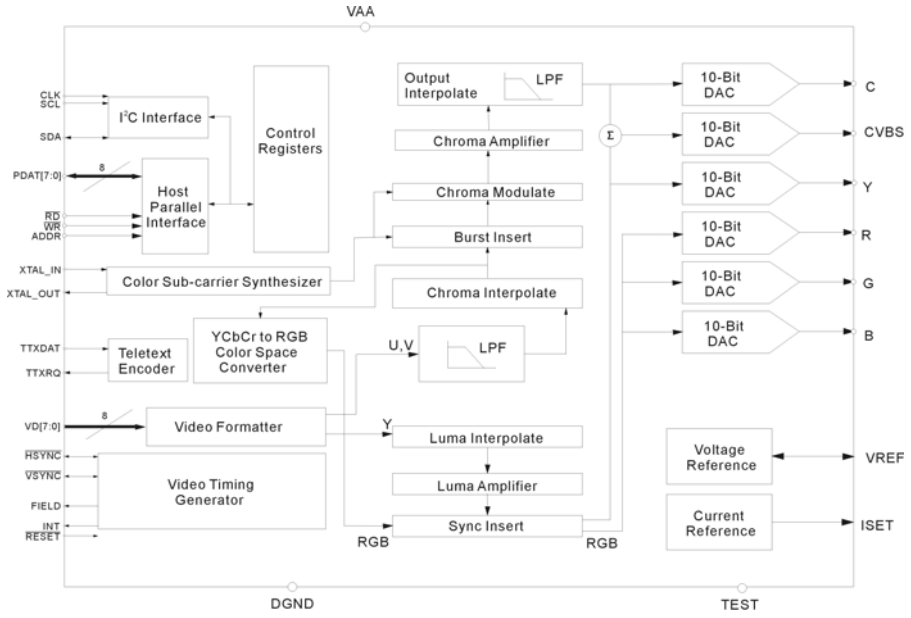

DESCRIPTION

The CS4955 provides full conversion from digital video formats YcbCr or YUV into NTSC and PAL Composite, Y/C (S-video) and RGB, or YUV analog video. Input formats can be 27MHz 8-bit YUV, 8-bit YcbCr, or ITUR.BT656 with support for EAV/SAV codes. Video output can be formatted to be compatible with NTSC-M, NTSC-J, PAL-B, D, G, H, I, M, N, and Combination N systems. Closed Caption is supported in NTSC. Teletext is supported for NTSC and PAL.

Six 10-bit DACs provide two channels for an S-Video output port, one or two composite video outputs, and three RGB or YUV outputs. Two-times oversampling reduces the output filter requirements and guarantees no DAC-ralated modulation components within the specified bandwidth of any of the supported video standards.

Parallel or high-speed I^2C compatible conpatible control interfaces are provided for flexibility in system design. The parallel interface doubles as a general purpose I/O port when the CS4954 is in I^2C mode to help conserve valuable board area.

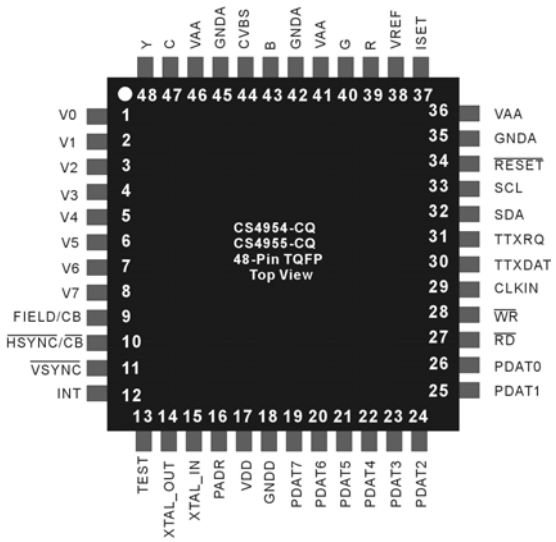

PIN DESCRIPTIONS

Pin Name	Pin Number	Type	Description
V[7:0]	8,7,6,5,4,3,2,1	IN	Digital video data inputs
CLK	29	IN	27MHz input clock
PADDR	16	IN	Address enable line
XTAL_IN	15	IN	Subcarrier crystal input
XTAL_OUT	14	OUT	Subcarrier crystal input
HSYNC/CB	10	I/O	Active low horizontal sync, or composite blank signal
VSYNC	11	I/O	Active low vertical sync
FIELD/CB	9	OUT	Video field ID. Selectable polarity or composite blank
RD	27	IN	Host parallel port read strobe, active low
WR	28	IN	Host parallel port write strobe, active low
PDAT[7:0]	19,20,21,22,23, 24,25,26	I/O	Host parallel port/general purpose I/O
SDA	32	I/O	I^2C data
SCL	33	IN	I^2C clock input
CVBS	44	CURRENT	Composite video output
Y	48	CURRENT	Luminance analog output
C	47	CURRENT	Chrominance analog output
R	39	CURRENT	Red analog output
G	40	CURRENT	Green analog output
B	43	CURRENT	Blue analog output
VREF	38	I/O	Internal voltage reference output or external reference input
ISET	37	CURRENT	DAC current set
TTXDAT	30	IN	Teletext data input
TTXRQ	31	OUT	Teletext request output
INT	12	OUT	Interrupt output, active high
RESET	34	IN	Active low master RESET
TEST	13	IN	TEST pin. Ground for normal operation
VAA	36,41,46	PS	+5V or +3.3V supply(must be same as VDD)
GNDD	18	PS	Ground
VDD	17	PS	+5V or 3.3V supply (must be same as VAA)

GNDA	**35,42,45**	**PS**	**Ground**

2-1-3 DVD Processor Chip (MTK1369AE)

* Features

- Single-chip DVD video decoder in a 208-pin PQFP package
- Supports MPEG-1 system and MPEG-2 program streams
- Programmable multimedia processor architecture
- Compatible with Audio CD, Video CD, VCD 3.0, and Super Video CD (SVCD)
- DVD Navigation 1
- Built-in content Scrambling System (CSS)

- Audio

- Built-in Karaoke key-shift function
- DolbyTM Digital 2-channel down mix audio output for DolbyTM
- Dolby Pro Logic
- Linear PCM streams for24 bit / 96KHz
- Concurrent S/PDIF out and 2-channel audio output
- Sensaura Dolby Digital Virtual Surround
- DTS Digital Surround 2-channel down mix stereo output
- S/PDIF output for encoded AC-3, DTS Digital output or Linear PCM

- Peripheral

- Glueless interface to DVD loaders (ATAPI or A/V bus I/F)
- Bi-directional 12C audio interface
- 8 general-purpose auxiliary ports
- Single 27MHz clock input

- Smart Technology

- SmartZoomTM for motion zoom & pan
- SmartZoomTM for NTSC to PAL conversion and vice versa
- SmartZoomTM for video error concealment

* Functional Description

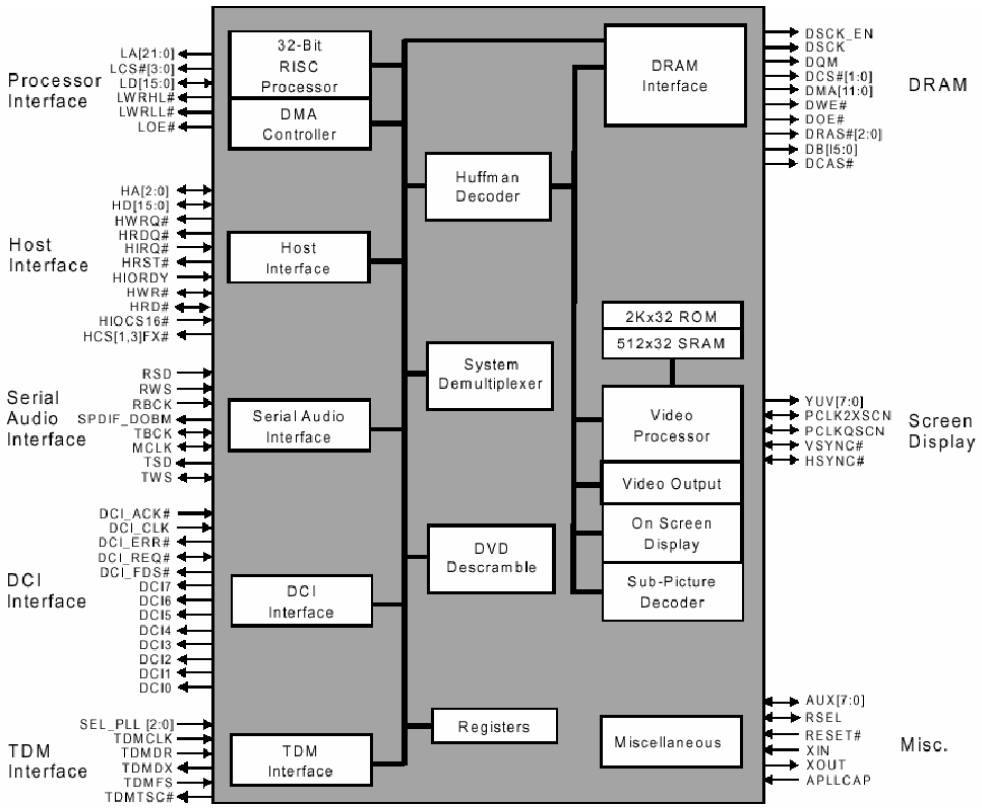

* Pinout Diagram

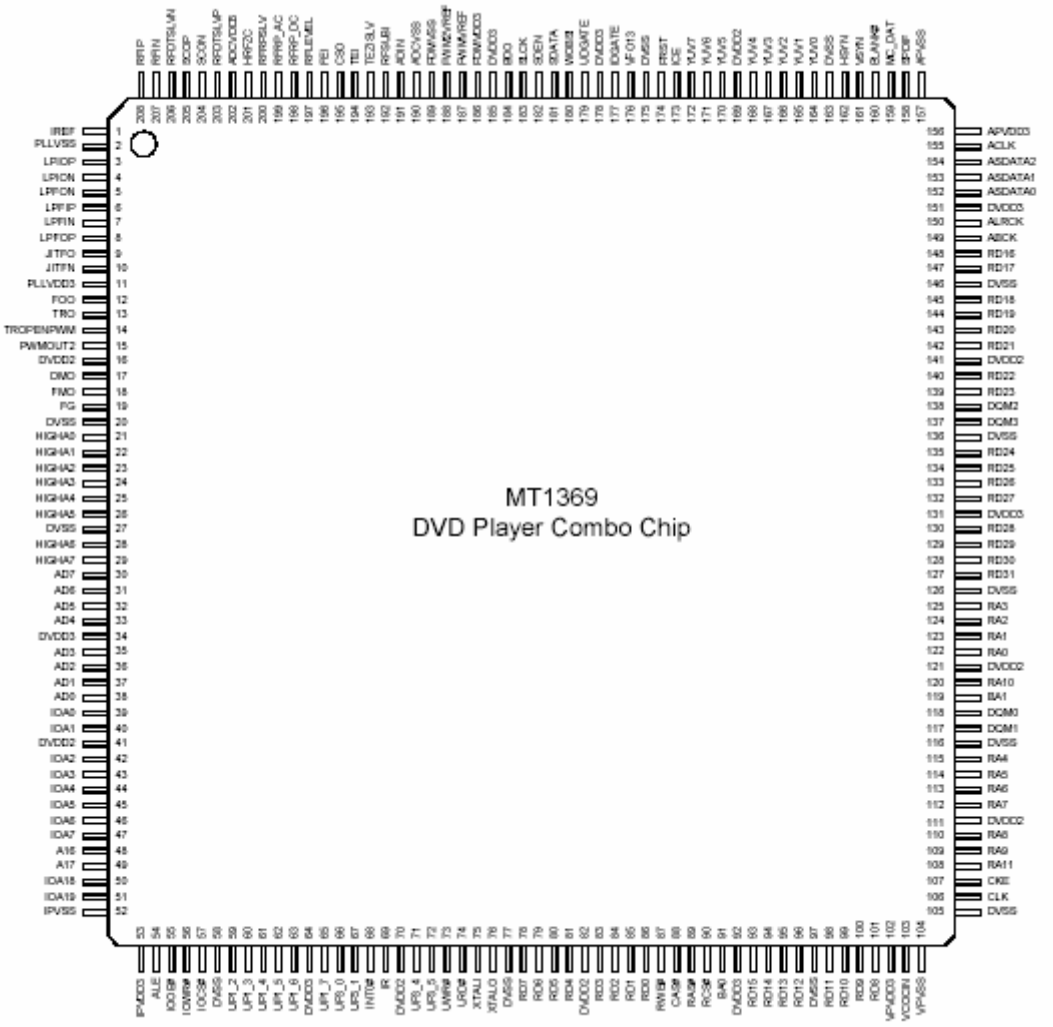
MT1369
DVD Player Combo Chip

PIN DESCRIPTON

PIN	Symbol	Type	Description
1	IREF	Analog Input	Current reference input.it generate reference current for data PLL Connect an external 100K resistor to this pin and PLLVSS.
2	PLLVSS	Ground	Ground for data PLL and related analog circuitry
3	LPIOP	Analog output	Positive output of the low pass filter
4	LPION	Analog output	Negative output of the low pass filter
5	LPFON	Analog output	Negative output of loop filter amplifiter
6	LPFIP	Analog input	Positive input of loop filter amplifier
7	LPFIN	Analog input	Negative input of loop filter amplifier
8	LPFOP	Analog output	Positive output of loop filter amplifier
9	JITFO	Analog output	RF jitter meter output
10	JITFN	Analog input	Negative input of the operation amplifier for RF jigger meter
11	PLLVDD3	Power	Power for data PLL and related analog circuitry
12	FOO	Analog output	Focus servo output. PDM output of focus servo compensator
13	TRO	Analog output	Tracking servo output.PDM output of tracking servo compensator
14	TROPENPWM	Analog outpu	Tray open output,controlled by microcontroller. This is PWM output for TRWMEN$_{27hRW2}$=1 or is digital output for TRWMEN$_{27Hrw2}$=0
15	PWMOUT2	Analog outpu	The general PWM output
16	DVDD2	Power	2.5V power
17	DMO	Analog outpu	Disk motor control output.PWM output
18	FMO	Analog outpu	Feed motor control. PWM output
19	FG	Inout, pull up	Motor Hall sensor input
20	DVSS	Ground	Ground
21	HIGHA0	Inout, pull up	Microcontroller address 8
22	HIGHA1	Inout, pull up	Microcontroller address 9
23	HIGHA2	Inout, pull up	Microcontroller address 10
24	HIGHA3	Inout, pull up	Microcontroller address 11
25	HIGHA4	Inout, pull up	Microcontroller address 12
26	HIGHA5	Inout, pull up	Microcontroller address 13
27	DVSS	Ground	Ground
28	HIGHA6	Inout, pull up	Microcontroller address 14
29	HIGHA7	Inout, pull up	Microcontroller address 15
30	AD7	Inout	Microcontroller address/data 7
31	AD6	Inout	Microcontroller address/data 6
32	AD5	Inout	Microcontroller address/data 5
33	AD4	Inout	Microcontroller address/data 4
34	DVDD3	Power	3.3V power
35	AD3	Inout	Microcontroller address/data 3
36	AD2	Inout	Microcontroller address/data 2
37	AD1	Inout	Microcontroller address/data 1
38	AD0	Inout	Microcontroller address/data 0
39	IOA0	Inout, pull up	Microcontroller address 0/GPIO0
40	IOA1	Inout, pull up	Microcontroller address 0/GPIO1
41	DVDD2	Power	2.5V power
42	IOA2	Inout, pull up	Microcontroller address 0/GPIO2
43	IOA3	Inout, pull up	Microcontroller address 0/GPIO3
44	IOA4	Inout, pull up	Microcontroller address 0/GPIO4
45	IOA5	Inout, pull up	Microcontroller address 0/GPIO5
46	IOA6	Inout, pull up	Microcontroller address 0/GPIO6
47	IOA7	Inout, pull up	Microcontroller address 0/GPIO7
48	A16	Outpu	Flash address 16
49	A17	Output	Flash address 17
50	IOA18	Inout	Flash address 18 / GPIO10
51	IOA19	Inout	Flash address 19 / GPIO11
52	DMVSS	Ground	Ground for DRAM clock circuitry
53	DMVDD3	Power	Power for DRAM clock circuitry

PIN	Symbol	Type	Description
54	ALE	Inout,pull up	Microcontroller address latch enable
55	IOOE#	Inout	Flash output enable,active low /GPIO13
56	IOWR#	Inout	Flash write enable,active low /GPIO17
57	IOCS#	Inout,pull up	Flash chip select,active low /GPIO18
58	DVSS	Ground	Ground
59	UP1_2	Inout,pull up	Microcontroller port 1-2
60	UP1_3	Inout,pull up	Microcontroller port 1-3
61	UP1_4	Inout,pull up	Microcontroller port 1-4
62	UP1_5	Inout,pull up	Microcontroller port 1-5
63	UP1_6	Inout,pull up	Microcontroller port 1-6
64	DVDD3	Power	3.3V power
65	UP1_7	Inout,pull up	Microcontroller port 1-7
66	UP3_0	Inout,pull up	Microcontroller port 3-0
67	UP3_1	Inout,pull up	Microcontroller port 3-1
68	INT0#	Inout,pull up	Microcontroller interrupt 0,active low
69	IR	Input	IR control signal input
70	DVDD2	Power	2.5V power
71	UP1_4	Inout	Microcontroller port 3-4
72	UP1_5	Inout	Microcontroller port 3-5
73	UWR#	Inout,pull up	Microcontroller write strobe,active low
74	URD#	Inout,pull up	Microcontroller read strobe,active low
75	XTALI	Input	Crystal input,27MHz
76	XTALO	Output	Crystal output
77	DVSS	Ground	Ground
78	RD7	Inout	DRAM data 7
79	RD6	Inout	DRAM data 6
80	RD5	Inout	DRAM data 5
81	RD4	Inout	DRAM data 4
82	DVDD2	Power	2.5V power
83	RD3	Inout	DRAM data 3
84	RD2	Inout	DRAM data 2
85	RD1	Inout	DRAM data 1
86	RD0	Inout	DRAM data 0
87	RWE#	Output	DRAM write enable,active low
88	CAS#	Output	DRAM column address strobe,active low
89	RAS#	Output	DRAM row address strobe,active low
90	RCS#	Output	DRAM chip select,active low
91	BA0	Output	DRAM bank address 0
92	DVDD3	Power	3.3V power
93	RD15	Inout,pull up/down	DRAM data 15
94	RD14	Inout,pull up/down	DRAM data 14
95	RD13	Inout,pull up/down	DRAM data 13
96	RD12	Inout,pull up/down	DRAM data 12
97	DVSS	Ground	Ground
98	RD11	Inout,pull up/down	DRAM data 11
99	RD10	Inout,pull up/down	DRAM data 10
100	RD9	Inout,pull up/down	DRAM data 9
101	RD8	Inout,pull up/down	DRAM data 8
102	VPVDD3	Power	Power for varipitch VCO circuitry
103	VCOCIN	Analog input	Connect capacitor for compensator loop filter
104	VPVSS	Ground	Ground for varipitch VCO circuitry
105	DVSS	Ground	Ground
106	CLK	Output	DRAM clock
107	CLE	Output	DRAM clock enable
108	RA11	Output	DRAM address bit 11 or audio serial data 3 (channel 7/8)
109	RA9	Output	DRAM address 9
110	RA8	Output	DRAM address 8
111	DVDD2	Power	2.5V power
112	RA7	Output	DRAM address 7

PIN	Symbol	Type	Description
113	RA6	Output	DRAM address 6
114	RA5	Output	DRAM address 5
115	RA4	Output	DRAM address 4
116	DVSS	Ground	Ground
117	DQM1	Output	Mask for DRAM input/output byte 1
118	DQM0	Output	Mask for DRAM input/output byte 0
119	BA1	Output	DRAM bank address 0
120	RA10	Output	DRAM address 10
121	DVDD2	Power	2.5V power
122	RA0	Output	DRAM address 0
123	RA1	Output	DRAM address 1
124	RA2	Output	DRAM address 2
125	RA3	Output	DRAM address 3
126	DVSS	Ground	Ground
127	RD31	Inout,pull up/down	DRAM data 31
128	RD30	Inout,pull up/down	DRAM data 30
129	RD30	Inout,pull up/down	DRAM data 29
130	RD29	Inout,pull up/down	DRAM data 28
131	DVDD3	Power	3.3V power
132	RD27	Inout,pull up/down	DRAM data 27
133	RD26	Inout,pull up/down	DRAM data 26
134	RD25	Inout,pull up/down	DRAM data 25
135	RD24	Inout,pull up/down	DRAM data 24
136	DVSS	Ground	Ground
137	DQM3	Output	Mask for DRAM input/output byte 3
138	DQM2	Output	Mask for DRAM input/output byte 2
139	RD23	Inout,pull up/down	DRAM data 23
140	RD22	Inout,pull up/down	DRAM data 22
141	DVDD2	Power	2.5V power
142	RD21	Inout,pull up/down	DRAM data 21
143	RD20	Inout,pull up/down	DRAM data 20
144	RD19	Inout,pull up/down	DRAM data 19
145	RD18	Inout,pull up/down	DRAM data 18
146	DVSS	Ground	Ground
147	RD17	Inout,pull up/down	DRAM data 17
148	RD16	Inout,pull up/down	DRAM data 16
149	ABCK	Output	Audio bit clock
150	ALRCK	Input,pull down	(1) Audio left/right channel clock (2)Trap value in power-on reset. 1:use external 373, 0:use internal 373
151	DVDD3	Power	3.3V power
152	ASDATA0	Input,pull down	Audio serial data 0 (left/right channel)
153	ASDATA1	Input,pull down	Audio serial data 1 (surround left/surround right channel)
154	ASDATA2	Input,pull down	Audio serial data 2 (center/LFE channel)
155	ACLK	Inout	Audio DAC master clock (384/256 audio sample frequency)
156	APVDD3	Power	Power for audio clock circuitry
157	APVSS	Ground	Ground for audio clock circuitry
158	SPDIF	Output	SPDIF output
159	MC_DAT	Input	Microphone serial input
160	BLANK#	Inout	Video blank area, active low / GPIO14
161	VSYN	Inout	Vertical sync / GPIO16
162	HSYN	Inout	Horizontal sync / GPIO15
163	DVSS	Ground	Ground
164	YUVO	Output	Video data output bit 0
165	YUV1	Output	Video data output bit 1
166	YUV2	Output	Video data output bit 2
167	YUV3	Output	Video data output bit 3
168	YUV4	Output	Video data output bit 4
169	DVDD2	Power	2.5V power
170	YUV5	Output	Video data output bit 5
171	YUV6	Output	Video data output bit 6

PIN	Symbol	Type	Description
172	YUV7	Output	Video data output bit 7
173	ICE	Input,pull down	Microcontroller ICE mode enable
174	PRST	Input,pull down	Power on reset input, active high
175	DVSS	Ground	Ground
176	VFO13	Output	The 1st, 3rd VFO pulse output of DVD-RAM ID header
177	IDGATE	Output	DVD-RAM ID header detect signal output
178	DVDD3	Power	3.3V power
179	UDGATE	Output	DVD-RAM recording data gate signal output
180	WOBSI	Input	Wobble signal input
181	SDATA	Output	RF serial data input
182	SDEN	Output	RF serial data latch enable
183	SLCK	Output	RF serial clock output
184	BDO	Input,pull down	Flag of defect data status input
185	DVDD3	Power	3.3V power
186	PDMVDD3	Power	Power for PDM circuitry
187	PWMVREF	Analog input	A reference voltage input for PWM circuitry.A typical value of 2.8v
188	PWM2VREF	Analog input	A reference voltage input for PWM circuitry.A typical value of 1.4v
189	PDMVSS	Ground	Ground for PDM circuitry
190	ADCVSS	Ground	Ground for ADC circuitry
191	ADIN	Analog input	General A/D input
192	RFSUBI	Analog input	RF subtraction signal input terminal
193	TEZISLV	Analog input	Tracking error zero crossing low pass input
194	TEI	Analog input	Tracking error input
195	CSO	Analog input	Central servo input
196	FEI	Analog input	Focus error input
197	RFLEVEL	Analog input	Sub beam add input or RFRP low pass input
198	RFRP_DC	Analog input	RF ripple detect input
199	RFRP_AC	Analog input	RF ripple detect input (through AC coupling)
200	RFRPSLV	Analog input	RFRP slice level input
201	HRFZC	Analog input	High frequency RF ripple zero crossing
202	ADCVDDS	Power	Power for ADC circuitry
203	RFDTSLVP	Analog output	Positive RF data slicer level output
204	SCON	Analog output	Negative analog slicer current output
205	SCOP	Analog output	Positive analog slicer current output
206	RFDTSLVN	Analog output	Negative RF data slicer level output
207	RFIN	Analog input	Negative input of RF differential signal
208	RFIP	Analog input	Positive input of RF differential signal

MT1336

GENERAL DESCRIPTION

MT1336 is a high performance CMOS analog front-end IC for both CD_ROM driver up to 48xs and DVD-ROM driver up to 16xs. It also supports DVD-RAM read up to 4xs Version 2. It contains servo amplifiers to generate focusing error, 3-beam tracking error, 1 beam radial push-pull signal, RF level and SBAD for servo functions. It also includes DPD tracking error signal for DVD_ROM application. For DVD-RAM disks, there are also Differential Push-Pull (DPP) method for generating tracking signal and Differential Astigmatic Detection (DAD) for processing focusing signal. Programmable equalizer and AGC circuits are also incorporated in this chip to optimize read channel performance. In addition, this chip has dual automatic laser power control circuits for DVD-ROM (DVD-RAM) and CD-ROM seperately and reference voltage generators to reduce external components. Programmable functions are implemented by the access of internal register through bi-directional serial port to configure modes selection.

FEATURES

. RF equalizer with programmable f_c from 3MHz to 70MHz and programmable boost from 3db to 13db.

. MT1336 supports at least eight different kinds of pick-up heads with versatile input configuration for both RF input stages and servo signal blocks.

. Versatile on-line AGC.
. 3 beams tracking error signal generator for CD_ROM application.
. One beam differential phase tracking error (DPD) generator for DVD_ROM application.
. Differential push pull tracking error (DPP) generator for DVD_RAM application.
. Focusing error signal generator for CD-ROM, DVD-ROM and DVD-RAM (DAD method).
. RF level signal generator.
. Sub-beam added signal for 3 beams CD_ROM.
. One beam push-pull signal generator for central servo application.
. High speed RF envelop detection circuit with bandwidth up to 400KHz for CD-ROM.
. Defect and Blank detection circuits
. Dual automatic laser power control circuits with programmable level of LD monitor voltage.
. Vref-1.4V voltage and V2ref=2.8V voltage generators.
. V20=2.0V voltage for pick-up head reference.
. Bi-directional serial port to access internal registers.
. 128-pin LQFP

Block Diagram……..P.3
Pin Assignment and Description……..P.4-9
Functions
1.) RF Path Description…….P. 10-13
2.) Servo Signal……..P. 14-17
. Focusing Error
. Central Servo
. Tracking Error
. RFLVL & SBAD (LVL)
3.) ALPC & RFRP (RF Ripple)…….P. 18
4.) WOBBLE Detection……..P. 19

Command Access Timings……P. 20
Programmable I/O ……P. 21
Register
1.) Register Map…….P. 22-24
2.) Register Description…….P. 25-50

MT1336 PIN DESCRIPTIONS

Pin Numbers	Symbol	Type	Description
LQFP128			
RF Flag interface			
23	DEFECT	Digital input	Flag of bad data output status
RF SIO interface			
56	SCLK	Digital input	RF serial clock input
58	SDEN	Digital input	RF serial data enable
59	SDATA	Digital IO	RF serial data IO
60	RST	Digital input	Reset (active high)
55	XCK16M	Digital input	16.9MHz for verification
RF SERVO interface			
40	UDGATE	Digital input	Control signal for DVD-RAM
41	IDGATE	Digital input	Control signal for DVD-RAM
38	VFO13	Digital input	DVD-RAM Header signal
RF			

100	DVDA	Analog input	AC coupled DVD RF signal input A
99	DVDB	Analog input	AC coupled DVD RF signal input B
98	DVDC	Analog input	AC coupled DVD RF signal input C
97	DVDD	Analog input	AC coupled DVD RF signal input D
95	DVDRFIN	Analog input	AC coupled DVD RF signal input RFIN
96	DVDRFIP	Analog input	AC coupled DVD RF signal input RFIP
94	CDA	Analog input	AC coupled CD RF signal input A
93	CDB	Analog input	AC coupled CD RF signal input B
92	CDC	Analog input	AC coupled CD RF signal input C
91	CDD	Analog input	AC coupled CD RF signal input D
90	OSN	Analog	RF Offset cancellation capacitor connection
89	OSP	Analog	RF Offset cancellation capacitor connection
85	CEQP	Analog	RF Offset cancellation capacitor connection
84	CEQN	Analog	RF Offset cancellation capacitor connection
88	RFGC	Analog	RF AGC loop capacitor connecting for DVD-ROM
87	RFGCU	Analog	RF AGC loop capacitor connecting for DVD-ROM
86	RFGCI	Analog	RF AGC loop capacitor connecting for DVD-ROM
101	MA	Analog input	DC coupled DVD-RAM main-beam RF signal input A
102	MB	Analog input	DC coupled DVD-RAM main-beam RF signal input B
103	MC	Analog input	DC coupled DVD-RAM main-beam RF signal input C
104	MD	Analog input	DC coupled DVD-RAM main-beam RF signal input D
105	SA	Analog input	DC coupled DVD-RAM sub-beam RF signal input A
106	SB	Analog input	DC coupled DVD-RAM sub-beam RF signal input B
110	SC	Analog input	DC coupled DVD-RAM sub-beam RF signal input C
111	SD	Analog input	DC coupled DVD-RAM sub-beam RF signal input D
108	IR	Analog	External current bias resistor (R=20K)
119	AGC1	Analog	Wobble AGC loop1 capacitor
121	AGC2	Analog	Wobble AGC loop2 capacitor
122	AGC3	Analog	Wobble AGC loop3 capacitor
127	RFSUBO	Analog output	Header push-pull RF output signal
1	WOBSO	Analog output	Wobble signal output
6	RFOP	Analog output	RF positive output
7	RFON	Analog output	RF negative output
TRACKING ERROR			
32	DPFN	Analog	DPD amplifier negative input
33	DPFO	Analog	DPD amplifier output
61	DPDMUTE	Digital input	DPD mute control input
116	TNI	Analog input	3 beam satellite PD signal negative input
115	TPI	Analog input	3 beam satellite PD signal positive input
21	TEO	Analog Output	Tracking error output
FOCUSING ERROR & RF LEVEL & CENTRAL SERVO SIGNAL			
112	CDFOP	Analog input	CD focusing error positive input
113	CDFON	Analog input	CD focusing error negative input
18	FEO	Analog output	Focusing error output
19	LVL	Analog output	RF level output
20	CSO	Analog output	Central servo signal output
ALPC			
124	MDI1	Analog input	Laser power monitor input
125	LDO1	Analog Output	Laser driver output
123	MDI2	Analog input	Laser power monitor input
126	LDO2	Analog Output	Laser driver output
RF RIPPLE			
26	CRTP	Analog	RF top envelop filter capacitor connecting
27	CRTPLP	Analog	Defect level filter capacitor connecting
25	HRFRP	Analog output	High frequency RF ripple output or Blank detector’s output
24	LRFRP	Analog output	Low frequency RF ripple output
POWER			
67,69	AVDD	Power	Master PLL Filter power
65,73	AGND	GND	GND for Master PLL Filter
64	AVDD	Power	DPD Power
62	AGND	GND	DPD GND

109	AVDD	Power	RF path Power
107	AGND	GND	RF path GND
114	SVDD	Power	Servo Power
117	SGND	GND	Servo GND
2,120	WAVDD	Power	Wobble Power
128,118	WAGND	GND	Wobble GND
5	AVDDO	Power	Power for RF output
8	AGNDO	GND	GND for RF output
14	AVDDT	Power	Power for trimming PAD
12	AGNDT	GND	GND for trimming PAD
22	VDDP	Power	Peak Detection Power
31	GNDP	GND	Peak Detection GND
37,54	VDD	Power	Serial I/O Power
39,57	GND	GND	Serial I/O GND
REFERENCE VOLTAGE			
16	VREFO	Analog output	Reference voltage 1.4V
15	V2REFO	Analog output	Reference voltage 2.8V
17	V20	Analog output	Reference voltage 2.0V
ALPC TRIMMING			
9	TM1	Analog input	Trimming pin for ALPC1
10	TM2	Analog input	Trimming pin for ALPC1
11	TM3	Analog input	Trimming pin for ALPC2
13	TM4	Analog input	Trimming pin for ALPC2
HIGH SPEED TRACK COUNTING			
29	TRLP	Analog	Low-pass filter capacitor connecting
28	TRLPA	Analog	Low-pass filter capacitor connecting
30	HTRC	Digital output	High speed track counting digital output
PCS			
74	HALLSIN	Analog input	Negative input of amplifier for hall sensor signal
75	REFSIN	Analog input	Positive input of amplifier for hall sensor signal
76	SINPHI	Analog output	Amplifier output for hall sensor signal
71	HALLCOS	Analog input	Negative input of amplifier for hall sensor signal
72	REFCOS	Analog input	Positive input of amplifier for hall sensor signal
70	COSPHI	Analog output	Amplifier output for hall sensor signal
FOR MONITOR ONLY			
81	MON	Analog output	
80	MOP	Analog output	
66	VCON	Analog output	
77	SWO	Analog output	Output from mux of SW1 & SW2
78	SW2	Analog input	External input for servo input select
79	SW1	Analog input	External input for servo input select
FOR SERIAL I/O			
42	IO0		
43	IO1		
44	IO2		
45	IO3		
46	IO4		
47	IO5		
48	IO6		
49	IO7		
50	IO8		
51	IO9		
52	IOA		
53	IOB		

2-1-4 20-Pin, 24-Bit, 96kHz Stereo D/A with Volume Control (WM8720)

Features

- Performance:
  -102dB SNR ('A' weighted @48kHz),
  -THD: -95dB @ 0dB FS
- 5V or 3.3V supply operation
- Sampling frequency: 8kHz to 96kHz

- Input data word: 16 to 24-bit
- Hardware or SPI compatible serial port control modes:
  -Hardware mode:system clock, reset, mute, de-emphasis
  -Serial control mode: mute, de-emphasis, digital attenuation(256 steps), zero mute, phase reversal, power down
- Compatible with PCM1720

Description

The WM820 is a high performance stereo DAC designed for audio applications such as CD, DVD, home theatre systems, set top boxes and digital TV. The WM8720 supports data input word lengths from 16 to 24-bits and sampling rates up to 96kHz. The WM8720 consists of a serial interface port, digital interpolation filter, multi-bit sigma delta modulator and stereo DAC in a small 20-pin SSOP package. The WM8720 also includes a digitally controllable mute and attenuator function on each channel.

The WM8720 supports a variety of connection schemes for audio DAC control. The SPI-compatible serial control port provides access to a wide range of features including on-chip mute, attenuation and phase reversal. A hardware controlllable interface is also available.

The programmable data input port supports a variety of glueless interfaces to popular DSPs, audio decoders and S/PDIF and AES/EBU receivers.

APPLICATIONS

. CD, DVD audio
. Home theare systems
. Set top boxes
. Digital TV

BLOCK DIAGRAM

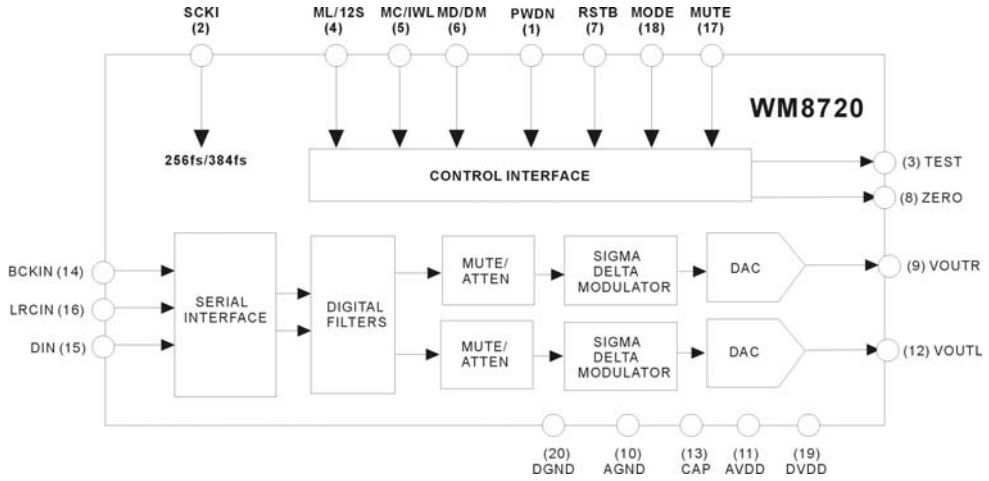

PIN DESCRIPTIONS

PIN	NAME	TYPE	DESCRIPTION
1	PWDN	Digital input	Powerdown control; low is ON, high is POWER OFF, Interal pull-down.
2	SCKI	Digital input	System clock input(256 or 384fs).
3	TEST	Digital output	Reserved.
4	ML/I2S	Digital input	Latch enable (software mode) or input format selection (hardware mode) Internal pull-up.
5	MC/IWL	Digital input	Serial control data clock input (software mode) or input word length selection (hardware mode). Internal pull-up.
6	MD/DM	Digital input	Serial control data input (software mode) or de-emphasis selection (hareware mode). Internal pull-up.
7	RSTB	Digital input	Reset input-active low. Internal pull-up.
8	ZERO	Digital output	Infinite zero detect-active low. Open drain type output with active pull-down.
9	VOUTR	Analogue output	Right channel DAC output.
10	AGND	Supply	Analogue ground supply.
11	AVDD	Supply	Analogue positive supply.
12	VOUTL	Analogue output	Left channel DAC output.
13	CAP	Analogue output	Analogue internal reference.
14	BCKIN	Digital input	Audio data bit
15	DIN	Digital input	Serial audio data input.
16	LRCIN	Digital input	Sample rate clock input.
17	MUTE	Digital IO	Mute control pin, input or automute output. Low is not mute, high is mute, Z is automute.
18	MODE	Digital input	Mode select pin. Low is software mode, high is hardware control. Internal pull-down.
19	DVDD	Supply	Digital positive supply.
20	DGND	Supply	Digital ground supply.

Note:

Digital input pins have Schmitt trigger input buffers.

2-1-5 Serial EEPROM, 2K (256 x 8) (24C16)

*** Features**

- Low-Voltage and Standard-Voltage Operation

  -5.0 (V CC = 4.5V to 5.5V)

  -2.7 (V CC = 2.7V to 5.5V)

  -2.5 (V CC = 2.5V to 5.5V)

  -1.8 (V CC = 1.8V to 5.5V)
- Internally Organized 128 x 8 (1K), 256 x 8 (2K), 512 x 8 (4K), 1024 x 8 (8K) or 2048 x 8 (16K)
- 2-Wire Serial Interface
- Schmitt Trigger, Filtered Inputs for Noise Suppression
- Bi-directional Data Transfer Protocol
- 100 kHz (1.8v, 2.5V, 2.7V) and 400 kHz (5V) Compatibility
- Write Protect Pin for Hardware Data Protection
- 8-Byte Page (1K, 2K), 16-Byte Page (4K, 8K, 16K) Write Modes
- Partial Page Writes Are Allowed
- Self-Timed Write Cycle (10 ms max)
- High Reliability
  - Endurance: 1 Million Write Cycles
  - Data Retention: 100 Years
  - ESD Protection: >3000V
- Automotive Grade and Extended Temperature Devices Available
- 8-Pin and 14-Pin JEDEC SOIC, 8-Pin PDIP, 8-Pin MSOP, and 8-Pin TSSOP Packages

*** Pin Configurations**

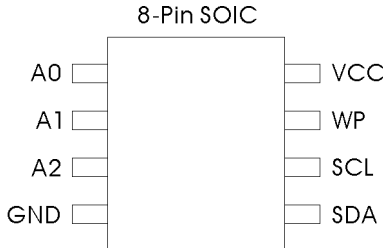

*** Pin Description**

Pin Name	Function
A0-A2	Address Inputs
SDA	Serial Data
SCL	Serial Clock input
WP	Write Protect
NC	No Connect

2-1-6 8M-BIT [1Mx8/512Kx16] CMOS FLASH MEMORY

FEATURES

• 1,048,576 x 8/524,288 x 16 switchable

• Single power supply operation

- 5.0V only operation for read, erase and program

operation

• Fast access time: 70/90/120ns
• Low power consumption
- 50mA maximum active current
- 0.2uA typical standby current
• Command register architecture
- Byte/word Programming (7us/12us typical)
- Sector Erase (Sector structure 16K-Bytex1, 8K-Bytex2, 32K-Bytex1, and 64K-Byte x15)
• Auto Erase (chip & sector) and Auto Program
- Automatically erase any combination of sectors with **Erase Suspend capability.**
- Automatically program and verify data at specified **address**
• Erase suspend/Erase Resume
- Suspends sector erase operation to read data from, or program data to, another sector that is not being erased, then resumes the erase.
• Status Reply
- Data polling & Toggle bit for detection of program and erase operation completion.
• Ready/Busy pin (RY/BY)
- Provides a hardware method of detecting program or erase operation completion.
• Sector protection
- Sector protect/chip unprotect for 5V/12V system.
- Hardware method to disable any combination of sectors from program or erase operations
- Tempory sector unprotect allows code changes in previously locked sectors.
• 100,000 minimum erase/program cycles
• Latch-up protected to 100mA from -1V to VCC+1V
• Boot Code Sector Architecture
- T = Top Boot Sector
- B = Bottom Boot Sector
• Low VCC write inhibit is equal to or less than 3.2V
• Package type:
- 44-pin SOP
- 48-pin TSOP
• Compatibility with JEDEC standard
- Pinout and software compatible with single-power supply Flash

PIN CONFIGURATIONS

44 SOP(500 mil)

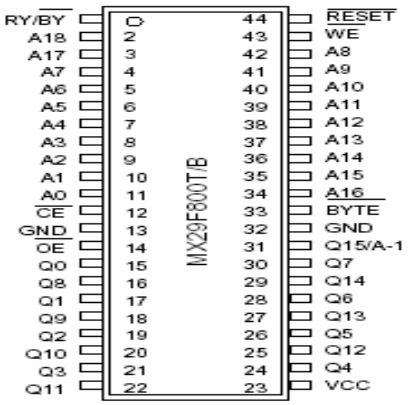

PIN DESCRIPTION

SYMBOL	PIN NAME
A0~A18	Address Input
Q0~Q14	Data Input/Output
Q15/A-1	Q15(Word mode)/LSB addr(Byte mode)
$\overline{CE}$	Chip Enable Input
$\overline{WE}$	Write Enable Input
$\overline{BYTE}$	Word/Byte Selction input
$\overline{RESET}$	Hardware Reset Pin/Sector Protect Unlock
$\overline{OE}$	Output Enable Input
RY/$\overline{BY}$	Ready/Busy Output
VCC	Power Supply Pin (+5V)
GND	Ground Pin

48 TSOP (Standard Type) (12mm x 20mm)

2-1-7 512K X 16 Bit X 2 Banks Synchronous DRAM (A43L0616)

Features

- JEDEC standard 3.3V power supply
- LVTTL compatible with multiplexed address
- Dual banks / Pulse RAS
- MRS cycle with address key programs
  - CAS Latency (2,3)
  - Burst Length (1,2,4,8 & full page)
  - Burst Type (Sequential & interleave)
- All inputs are sampled at the positive going edge of the system clock
- Burst Read Single-bit Write operation
- DQM for masking
- Auto & self refresh
- 64ms refresh period (4K cycle)
- 50 Pin TSOP (II)

Pin Configuration

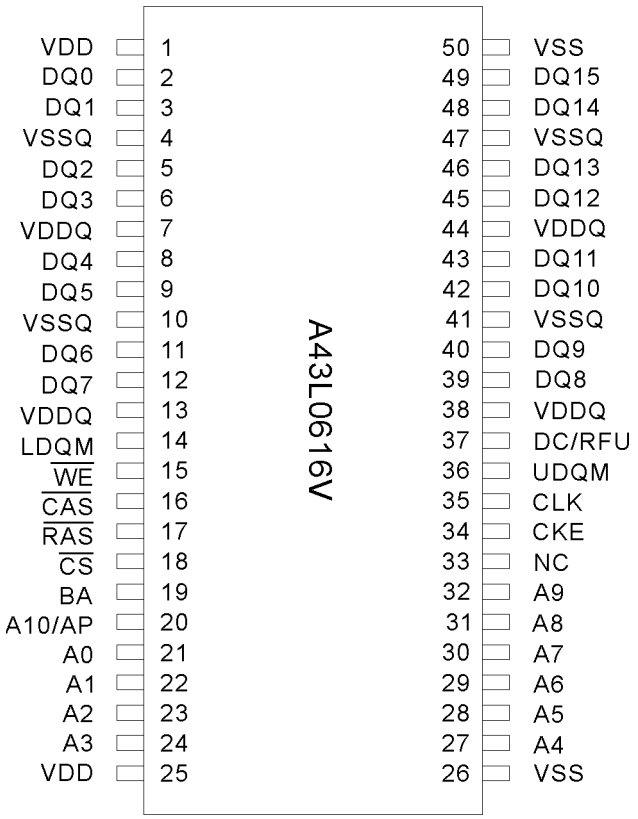
A43L0616V
VDD 1
DQ0 2
DQ1 3
VSSQ 4
DQ2 5
DQ3 6
VDDQ 7
DQ4 8
DQ5 9
VSSQ 10
DQ6 11
DQ7 12
VDDQ 13
LDQM 14
WE 15
CAS 16
RAS 17
CS 18
BA 19
A10/AP 20
A0 21
A1 22
A2 23
A3 24
VDD 25
50 VSS
49 DQ15
48 DQ14
47 VSSQ
46 DQ13
45 DQ12
44 VDDQ
43 DQ11
42 DQ10
41 VSSQ
40 DQ9
39 DQ8
38 VDDQ
37 DC/RFU
36 UDQM
35 CLK
34 CKE
33 NC
32 A9
31 A8
30 A7
29 A6
28 A5
27 A4
26 VSS

Block Diagram

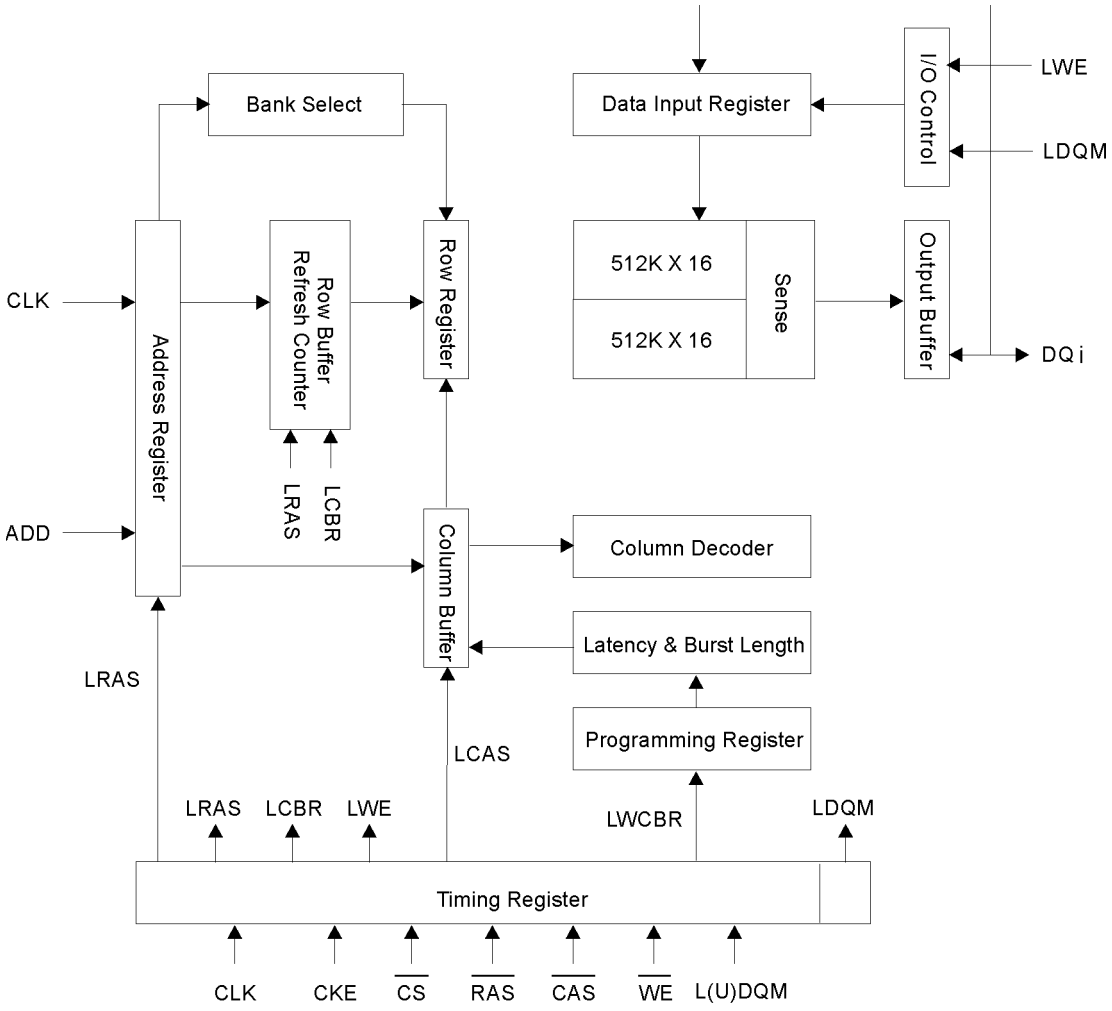

Pin Descriptions

Symbol	Name	Description
CLk	System Clock	Active on the positive going edge to sample all inputs
CS	Chip Select	Disables or Enables device operation by masking or enabling all inputs except CLK, CKE and L(U)DQM
CKE	Clock Enable	Masks system clock to freeze operation from the next clock cycle. CKE should be enabled at least one clock + tss prior to new command. Disable input buffers for power down in standby.
A0~A10/AP	Address	Row/Column addresses are multiplexed on the same pins. Row address: RA0 ~ RA10, Column address: CA0 ~ CA7
BA	Bank Select Address	Selects bank to be activated during row address latch time. Selects band for read/write during column address latch time.
RAS	Row address Strobe	Latches row addresses on the positive going edge of the CLK with RAS low. Enables row access & precharge.
CAS	Column Address Strobe	Latches column addresses on the positive going edge of the CLK with CAS low. Enables column access.
WE	Write Enable	Enables write operation and Row precharge.

Symbol	Name	Description
L(U)DQM	Data Input/Output Mask	Makes data output Hi-Z, t SHZ after the clock and masks the output. Blocks data input when L(U)DQM active.
DW0-15	Data Input/Output	Data inputs/outputs are multiplexed on the same pins.
VDD/VSS	Power Supply/Ground	Power Supply: +3.3V±0.3V/Ground
VDDQ/VSSQ	Data Output Power/Ground	Provide isolated Power/Ground to DQs for improved noise immunity.
NC/RFU	No Connection	

3. Product Specifications

Playback System

DVD Video
Video CD (1.1, 2.0, 3.0)
SVCD and CVD
CDDA
CD-ROM with MP3 data
PICTURE CD

Television Signal System

NTSC/PAL

Video Performance

Video Out	1 Vpp into 75 ohm
S-Video Out	Y: 1Vpp into 75 ohm C: 0.286 Vpp into 75 ohm
D/A Converter	27MHz/10bit

Audio Performance

Frequency Response	DVD: fs 48/96KHz, 4Hz~22/44KHz Video CD: fs 44.1KHz, 4Hz~20KHz Audio CD: fs 44.1KHz, 4Hz~20KHz
Output Level	Analog: 2Vrms(1KHZ) Digital: 1.15 Vpp
D/A Converter	96KHz/24bit
S/N Ratio	90dB

Connections

Coaxial digital out	X1
Audio Analog out for 2-channel	X1
S-Video out	X1

Power Supply

Power Source	AC100~255V, 50/60Hz
Power Consumption	<25 Watt

Set

Dimensions (W X H X D)	430 X 52 X 295 (mm)
Net Weight	2.6 Kg
Gross Weight	4.0 Kg

5. Disassembly and Reassembly

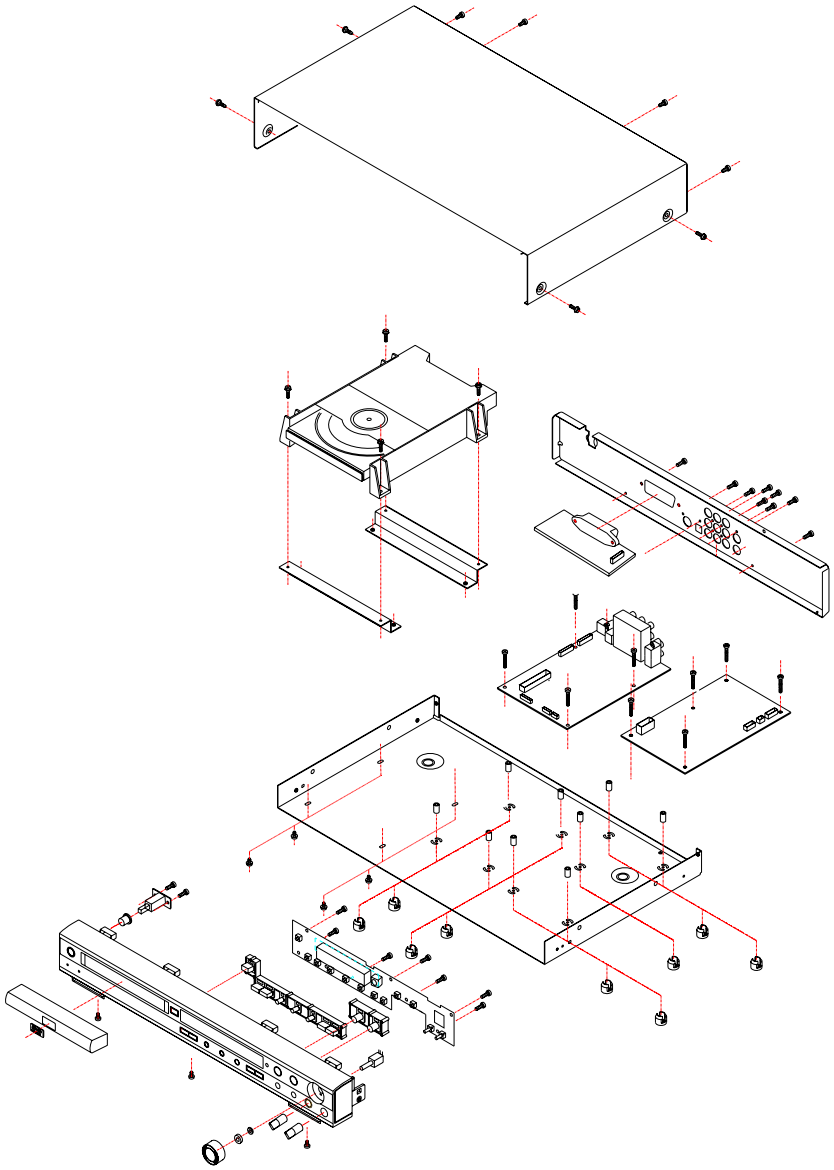

6. Troubleshooting

No power	Insert the AC power plug securely into the power outlet.
No picture	Make sure that the equipment is connected properly. Make sure that the input setting for TV is Video (AV).
No sound	Make sure that the equipment is connected properly.
Distorted sound	Make sure that the input settings for the TV and stereo system are correct.
No fast forward or fast reverse	Some discs may have sections that prohibit fast forward or fast reverse.
No proper aspect ratio	Select the correct setup for TV aspect ratio that matches your TV set.
No operations can be performed with the remote controller	Check the batteries are installed with the correct polarities. Point the remote control unit at the remote control sensor and operate. Remove the obstacles between the remote control unit and remote control sensor.
No button operation	Set the POWER button to OFF and then back to ON. Alternatively, turn off the power, disconnect the power plug and then reconnect it.
Audio soundtrack and/or Subtitle language is not the one you selected.	If the audio soundtrack and /or subtitle language does not exist on the disc, the language selected at the initial settings will not be seen.
No Angle change	This function is dependent on software availability. Even if a disc has a number of angles recorded, these angles may be recorded for specific scenes only.

7. Electrical Part List

CO-01 PRODUCT DESIGN PACKAGE LIST

No.	Name	Counts	Blueprint No.	Material No.	Notes
1	CO-01 surface subassembly	1			
2	SANYO HD60 loader	1			
4	Two-channel decoding sub-assembly for CO-01 DVD	1	CO-DJA1369XE+SANYO		with microphone and s-video output
5	CO-DPA118 subassembly	1	CO-DPA118		
6	Interface subassembly of SCART	1			
7	CO-01 motherboard	1	CO-DZCO-01		silver-gray, use electrolyzed iron
8	CO-01 backboard	1	CO-01HB		silk-screen file No.: CO-
9	power supply switch	1			PS8-4 6A 250V AC 10A 125V AC
10	pyrocondensation conducting tube				
11	outer cover	1	CO-01WZ		with mark of DECCAVIDEO
12	wire of power-supply	1			black,two round-heads, ,with VDE certification
13	PE bag for power-supply wire	1			unit□80*160mm with mark of environment-protecting
14	nylon-ribbon fastening string	5			
15	black fastening string	1			for power-supply wire
17	CO-01 CD gate-bar	1	CO-01CDM		for SANYO HD60 loader
18	sticker for DVD trademark	1			with background black and characters silvery
19	strut for circuit board	8			2 for decodeing board□6 for power-supply board
21	plastic nut cap	8			decodeing board 4□power-supply board 6

No.	Name	Counts	Blueprint No.	Material No.	Notes
22	rubber mat	2			thickness 2mm□ diameter 12mm
23	VCD rubber mat	3			thickness 19.5mm□diameter 9.5mm
24	Remote controller-V1	1			
25	battery	2			7# environment-protecting battery ENGLISH
26	PE bag for remote controller	1			Unit: 05*80*260mm with environment-protecting mark
27	manual	1			English
28	PE bag for manual	1			unit: 05*80*260mm with environment-protecting mark
29	foam	1	CO-108PM		355*110*80
30	handle for colourbox	1			
31	colourbox	1			
32	pearl cotton 480*580	1			Unit: mm with environment-protecting mark
33	nail BTV3*10 colouful zinc	4			4 for loader
34	with-cap hardened nailBTPW3*8 colorful zinc	8			4 for outer cover□4 for loader
35	round-headed self-fastened hardened nailBTV3*6 colorful zinc	14			3 for backboard, 4 for outer cover, 2 for side cover, 3 for cover and motherboard, 2 for shielding
36	round-headed self-fastened hardened nailBTV3*16 colorful zinc	8			power-supply board: 6□decoding board: 2
37	plain-headed triangular nail colorful zinc	2			2 for component and audio output 2 for scart board

No.	Name	Counts	Blueprint No.	Material No.	Notes
38	acute-headed nail BA3*8 colorful zinc	1			for coaxial output
39	1.5mm SCART wire	1			with two terminals 40-pins
40	video two-terminator yellow wire 1.5mm	1			linear figure,black
41	audio four-terminator red-white 1.5mm	1			linear figure,black
42	bar code				provided by client
43	assembly line number				provided by client
44	safety sticker	1			
45	2.0 connector/2.0connctor 6P red-white row-wire 160mm	1			from decoding board to loader
46	2.0 connector/2.0connctor 5P red-white row-wire 280mm	1			from decoding board to loader
47	2.54 connector/2.54connctor 6P red-white row-wire 220mm	1			from control board to decoding board
46	2.54 connector/2.54connctor 4P red-white row-wire 280mm	1			from control board board to power-supply
47	2.54 connector/2.54connctor 8P red-white row-wire 360mm	1			from power-supply board to decoding board

The list for cover subassembly design of CO-01

No.	Name	Counts	Blueprint No.	Material No.	Notes
1	trademark	1			
2	MODELL :DDV2140(DDV2141.DVD6722M.DVD5000.DVD412.fl d402)panel	1	CO-01		silk-screen file No.:
3	CO-01 power-supply button	1	CO-01		silver
4	CO-01 knob	2	CO-01		silver
5	number button	1	CO-01		silver
6	fast forward button	1	CO-01		silver
7	pause button	2	CO-01		silver
8	load/unload button	1	CO-01		silver
9	light-transporting canister	1	CO-01		
10	CO-01 VFD screen lens	1	CO-01XSJ		silk-screen blueprint No.:
12	subassembly of CO-DCBC0-01 control pannel	1			
13	Subassembly of CO-DHACO-02 earphone board	1			
14	plain-headed triangular nail BB3*8 colorful zinc	16			control panel:9, bracket for cover: 4, microphone board:1, power-supply switch: 2
15	ordinary green round-headed LED	1			diameter: 3mm round-headed

The components design list for control panel(CO-DCBCO-01)

No.	Name/Specification	Counts	Position in the paper	Material No.	Notes
resistor					
1	resistor 10E 1/4W 10%	2	R1,R9		
2	resistor 220E 1/4W 10%	2	R11,R12		
3	resistor 10K 1/4W 10%	7	R7,R6,R3,R2,R4,R8,R10		
4	resistor 56K 1/4W 10%	1	R5		
porcelain capacitor					
5	porcelain capacitor 104 50V	1	C3		diameter: 5mm
electrolyzed capacitor					
6	electrolyzed capacitor47 uF 16V	1	C1,C2		diameter:5mm
Diode					
7	diode IN4148	4	D1~D4		
IC					
8	16312(AD16312)	1	U1		
accessories					
11	VFD screen	1	IC2		BJ732GNK
12	left bracket of screen	1			
13	right bracket of screen	1			
14	control panel	1	CO—DCBCO-01		2001-3-18
15	touching-softly switch	12	K1~K12		6*6*5
16	remote control receiver	1			TD138
17	power switch	1			TV-5□KDC-A10-1D□8A/128A AC250V
18	2.54connector 4P without-terminator red-white row-wire 230mm	1	CN2		from control board to power-supply board
19	2.54 connector 6P red-white row-wire 220mm	1	CN1		from control board to decoding board
20	3.96connector 2P no-terminator 150 red both-insulated	1			from switch board to power-supply board
21	iron thread 8mm	3	J2,J3, JMP2		diameter: 0.6mm

No.	Name/Specification	Counts	Position in the paper	Material No.	Notes
22	iron thread 10mm	2	J1,J5		diameter: 0.6mm
23	iron thread 12mm	1	JMP1		diameter: 0.6mm

8. Block Diagram

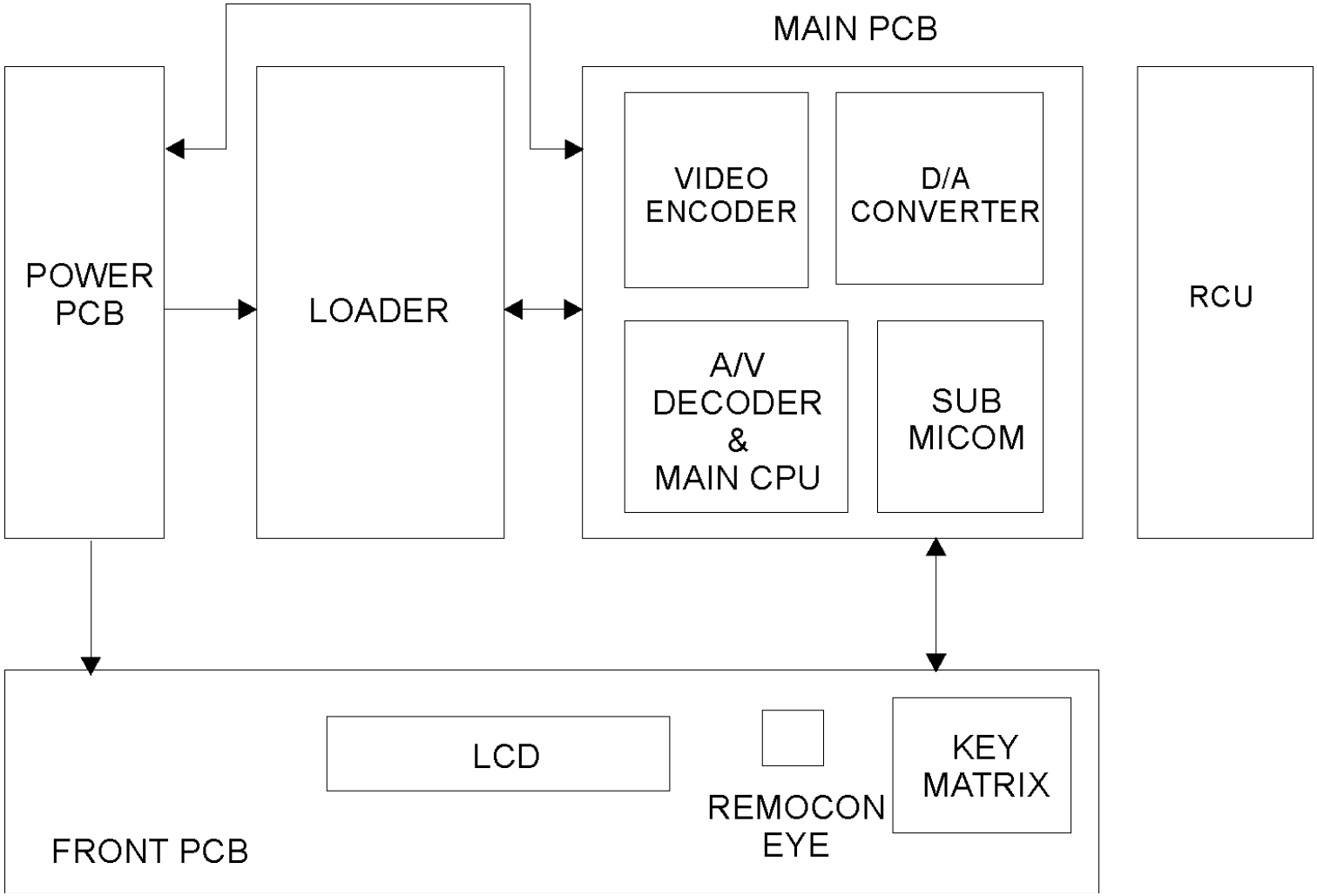

9. Circuit Diagrams

1.Control Part

2. INDEX

3.SERVO&RF

4.MEMORY

5.**Audio&Video D/A**

6.AV PORT

7.**Power Part**

8. Wiring Diagram

1.Control Part

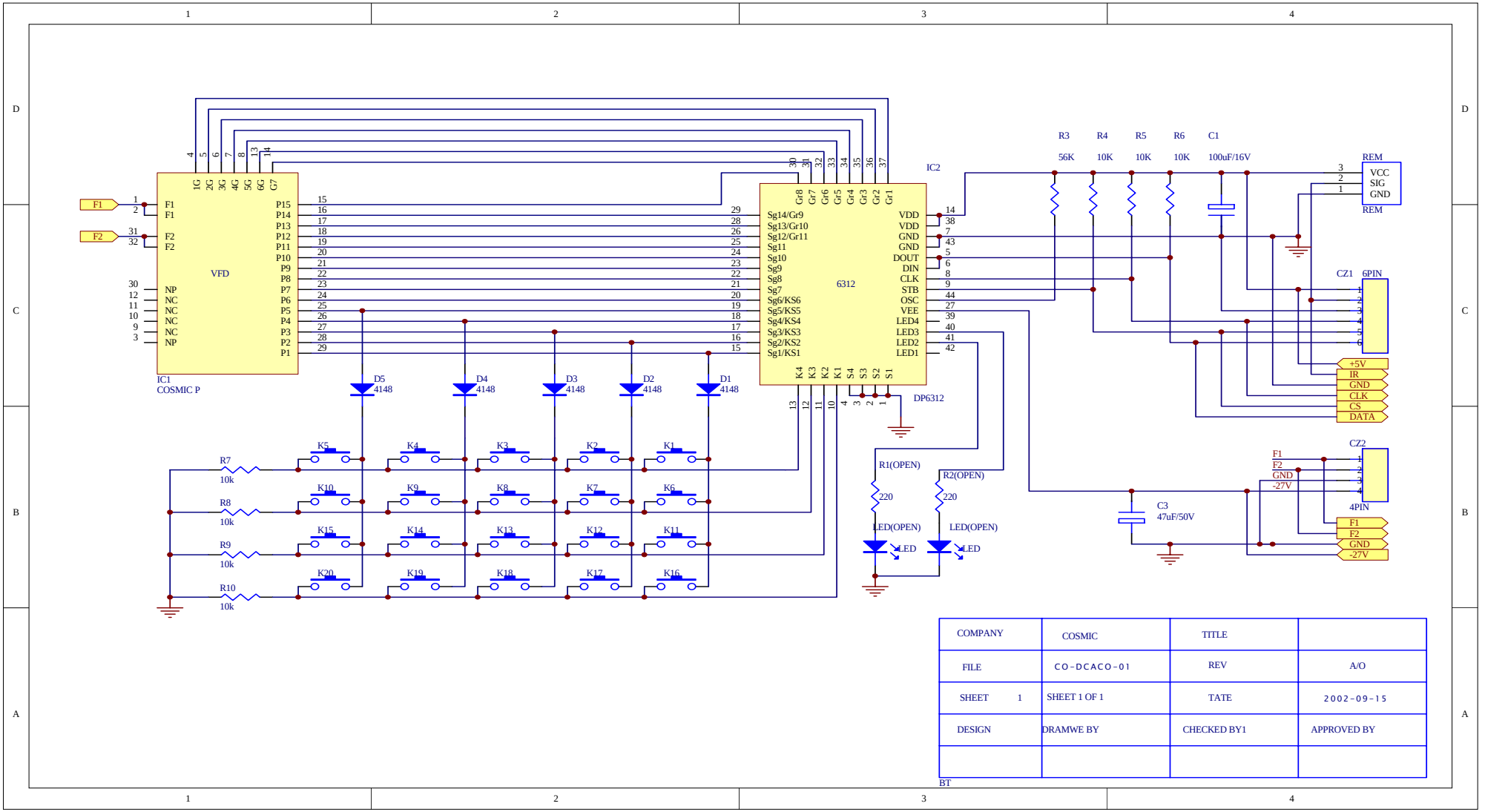

2. INDEX

HD60_C001

1 INDEX & POWER, RESET
2 RF / SERVO & MPEG - MT1336E / MT1369E
3 MEMORY - SDRAM, FLASH/EEPROM
4 AUDIO - WM8720&WM8746, VIDEO - CS4954/55
5 AV FILTER.

NAME	TYPE	DEVICE
VCC	Digital 5V	SUPPLY
RVCC	Servo 5V	MT1336E
AVCC	RF 5V	PICKUP HEADER
V33	Digital 3.3V	SDRAM, Flash, VideoDAC
DV33	Digital 3.3V	MT1369E
AV33	Servo 3.3V	MT1369E
V25	Digital 2.5V	MT1369E
+5VA	Audio 5V	Audio DAC
+3VV	Video 3.3V	Video DAC
+5VV	Video 5V	Video DAC
+12V	Audio 12V	Audio filter

NAME	TYPE
GND	Digital Ground
SGND	Servo Analog Ground
AGND	Audio Ground
VGND	Video Ground

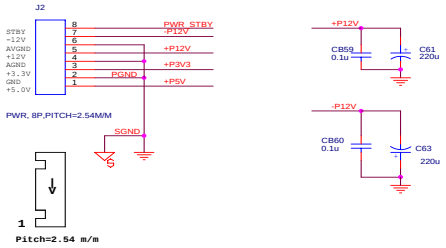

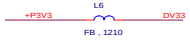

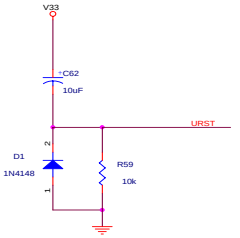

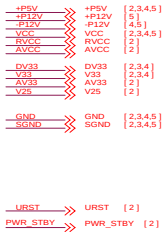

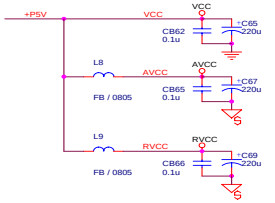

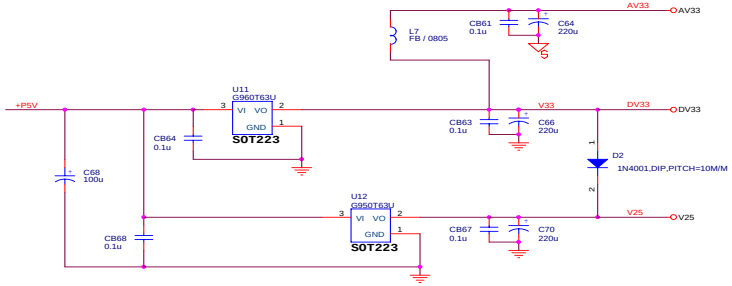

3.SERVO&RF

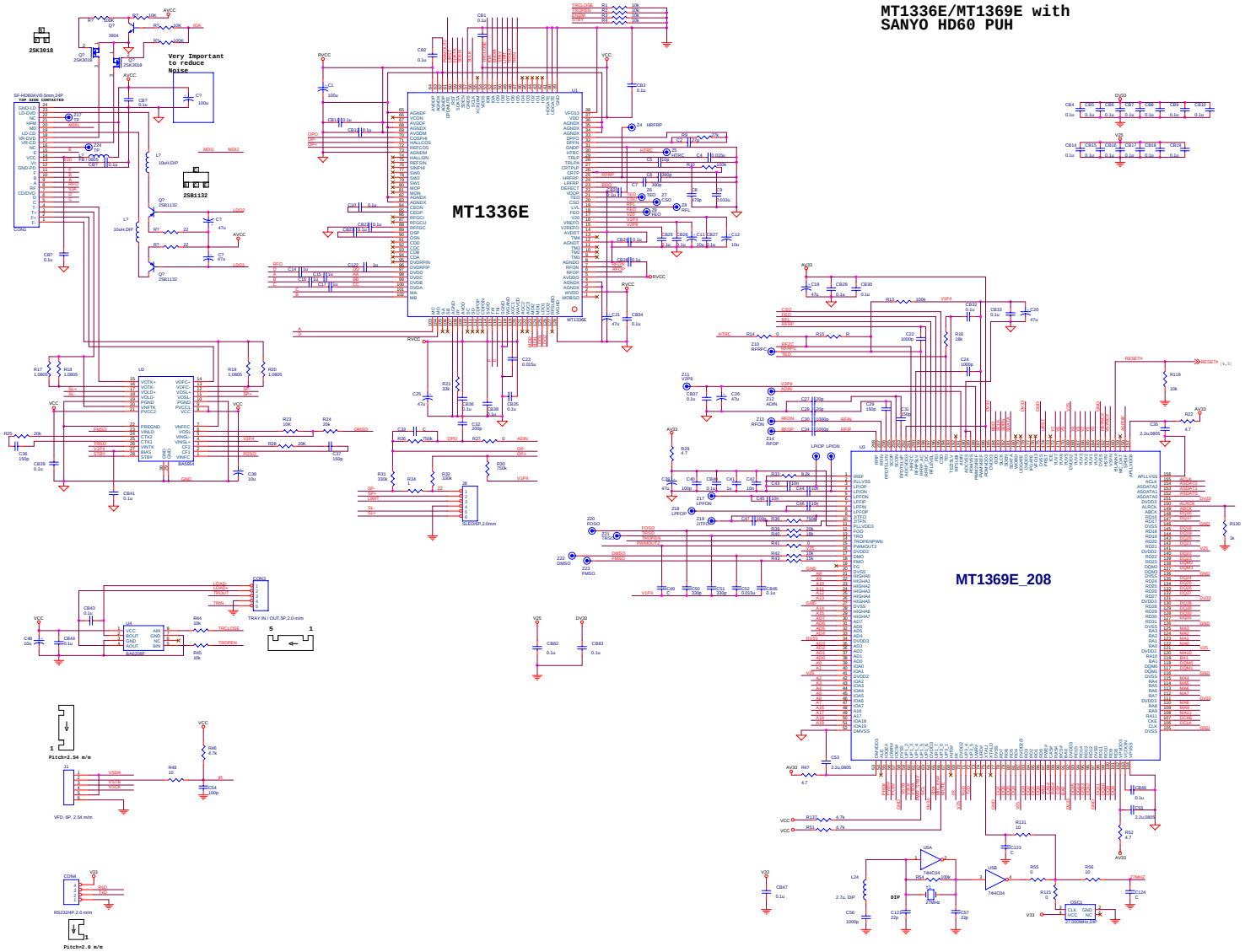
MT1336E/MT1369E with
SANYO HD60 PUH
MT1336E
MT1369E_208
2SK3018
2SB1132
Very Important
to reduce
Noise

4.MEMORY

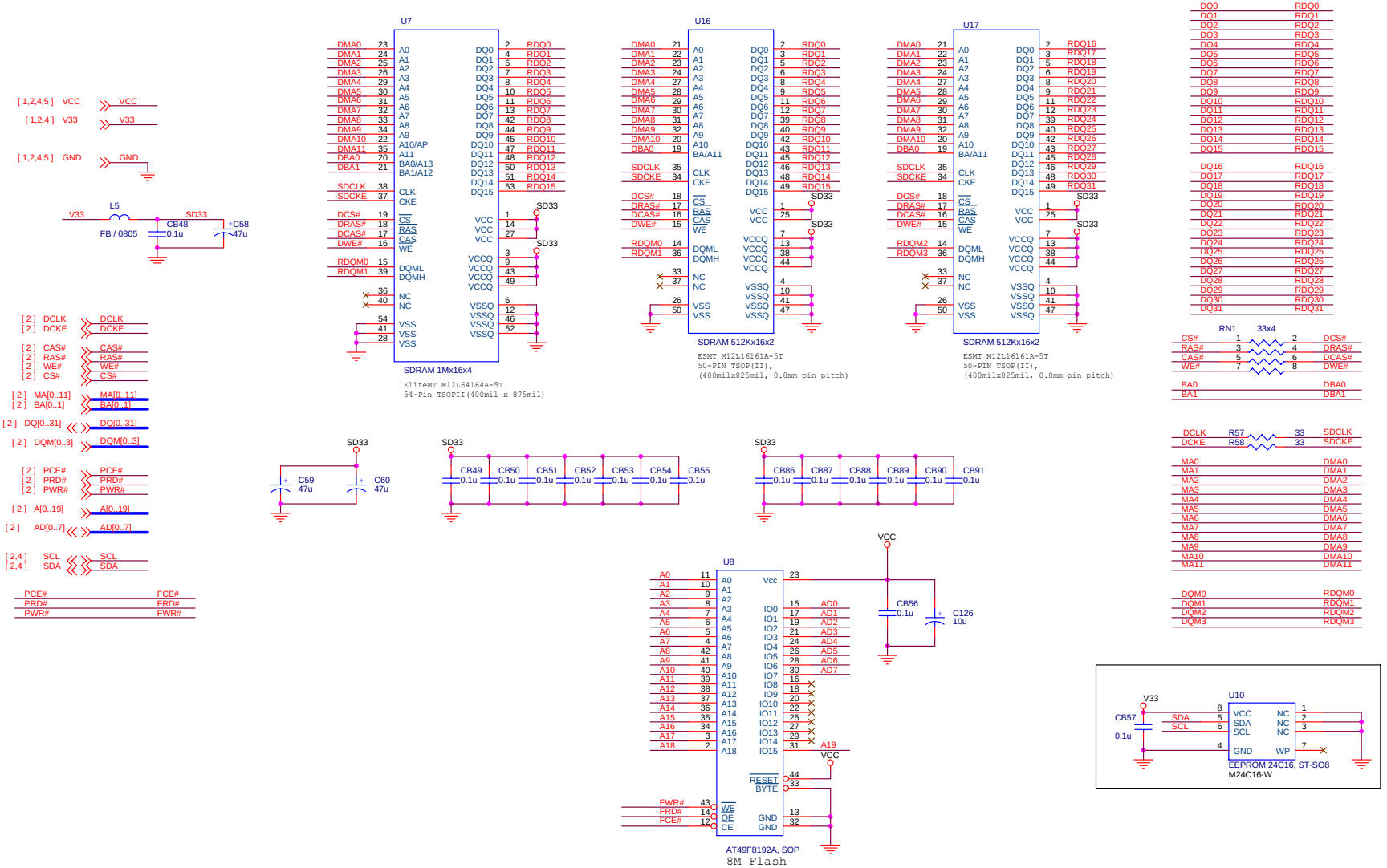
U7
SDRAM 1Mx16x4
EliteMT M12L64164A-5T
54-Pin TSOPII(400mil x 875mil)
U16
SDRAM 512Kx16x2
ESMT M12L16161A-5T
50-PIN TSOP(II),
(400mil1x825mil, 0.8mm pin pitch)
U17
SDRAM 512Kx16x2
ESMT M12L16161A-5T
50-PIN TSOP(II),
(400mil1x825mil, 0.8mm pin pitch)
U8
AT49F8192A, SOP
8M Flash
U10
EEPROM 24C16, ST-SO8
M24C16-W
RN1
33x4
SD33
VCC
V33
GND
L5
FB / 0805
CB48
0.1u
C58
47u
C59
47u
C60
47u
CB49
CB50
CB51
CB52
CB53
CB54
CB55
CB86
CB87
CB88
CB89
CB90
CB91
CB56
C126
10u
CB57
R57
R58
33
DCLK
DCKE
CS#
RAS#
CAS#
WE#
BA0
BA1
DQM0
DQM1
DQM2
DQM3
SDA
SCL
PCE#
PRD#
PWR#
FCE#
FRD#
FWR#

5.Audio&Video D/A

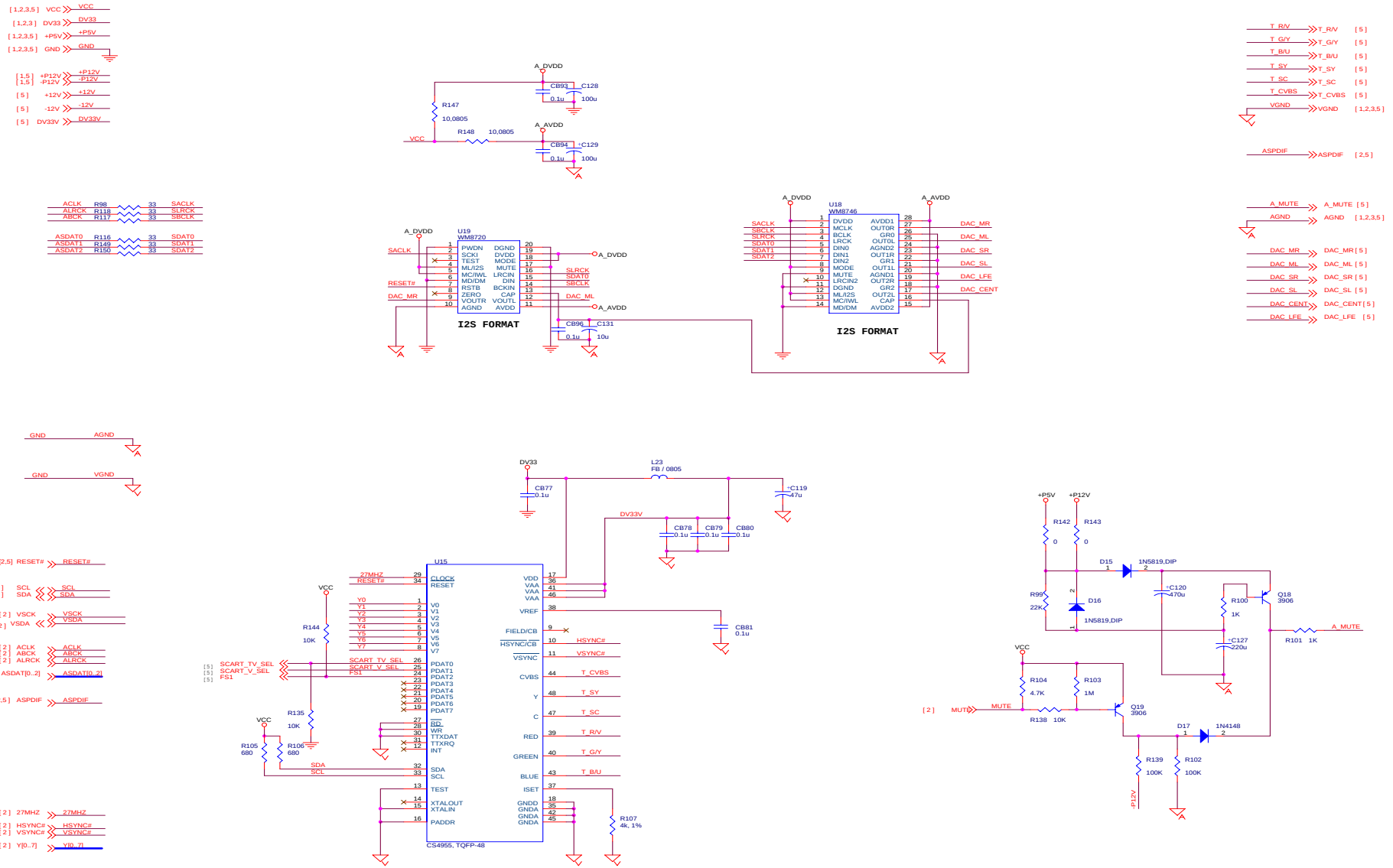

Audio

6.AV PORT

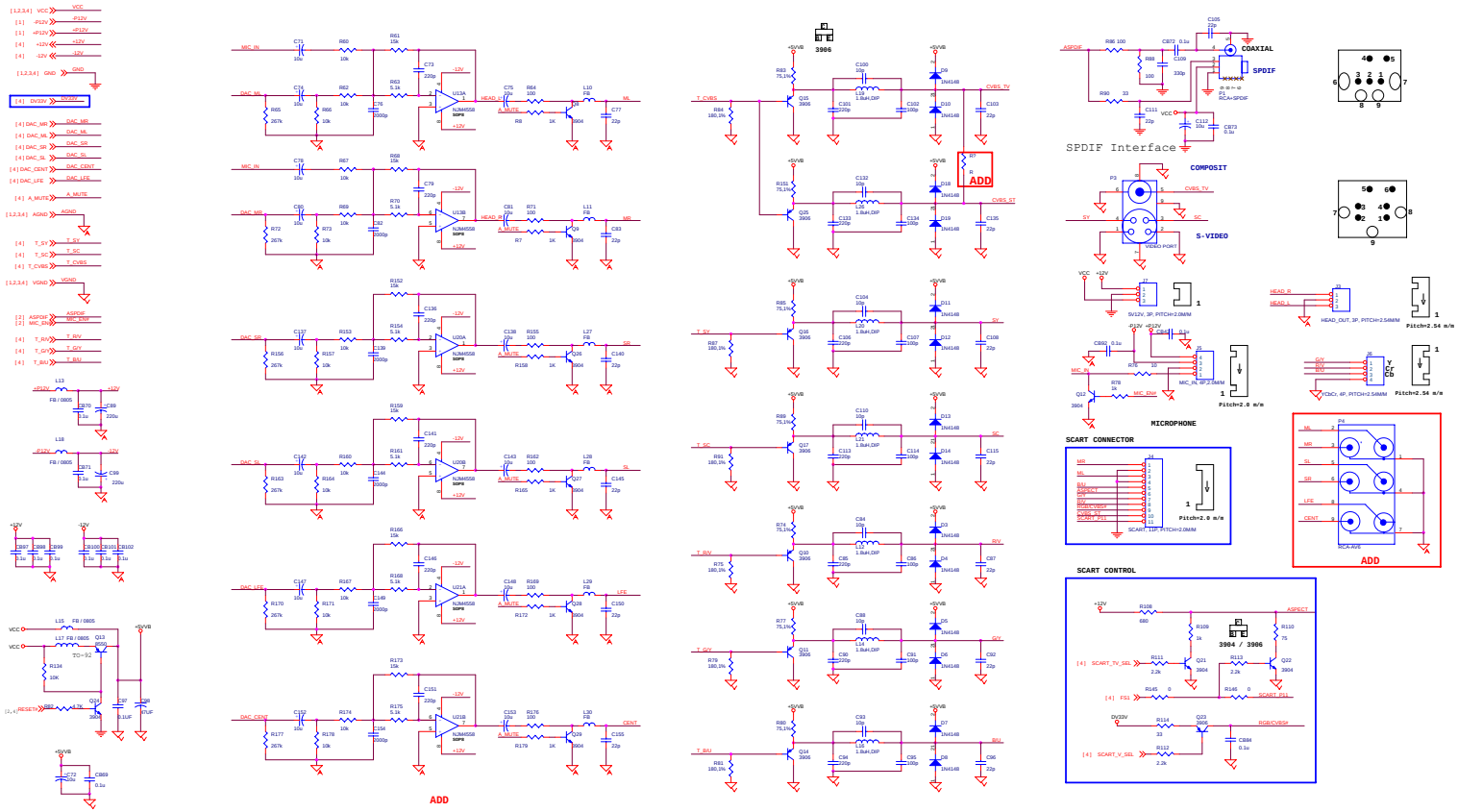
SPDIF Interface
COMPOSIT
S-VIDEO
COAXIAL
SPDIF
MICROPHONE
SCART CONNECTOR
SCART CONTROL
ADD
3906
3904 / 3906

7.Power Part

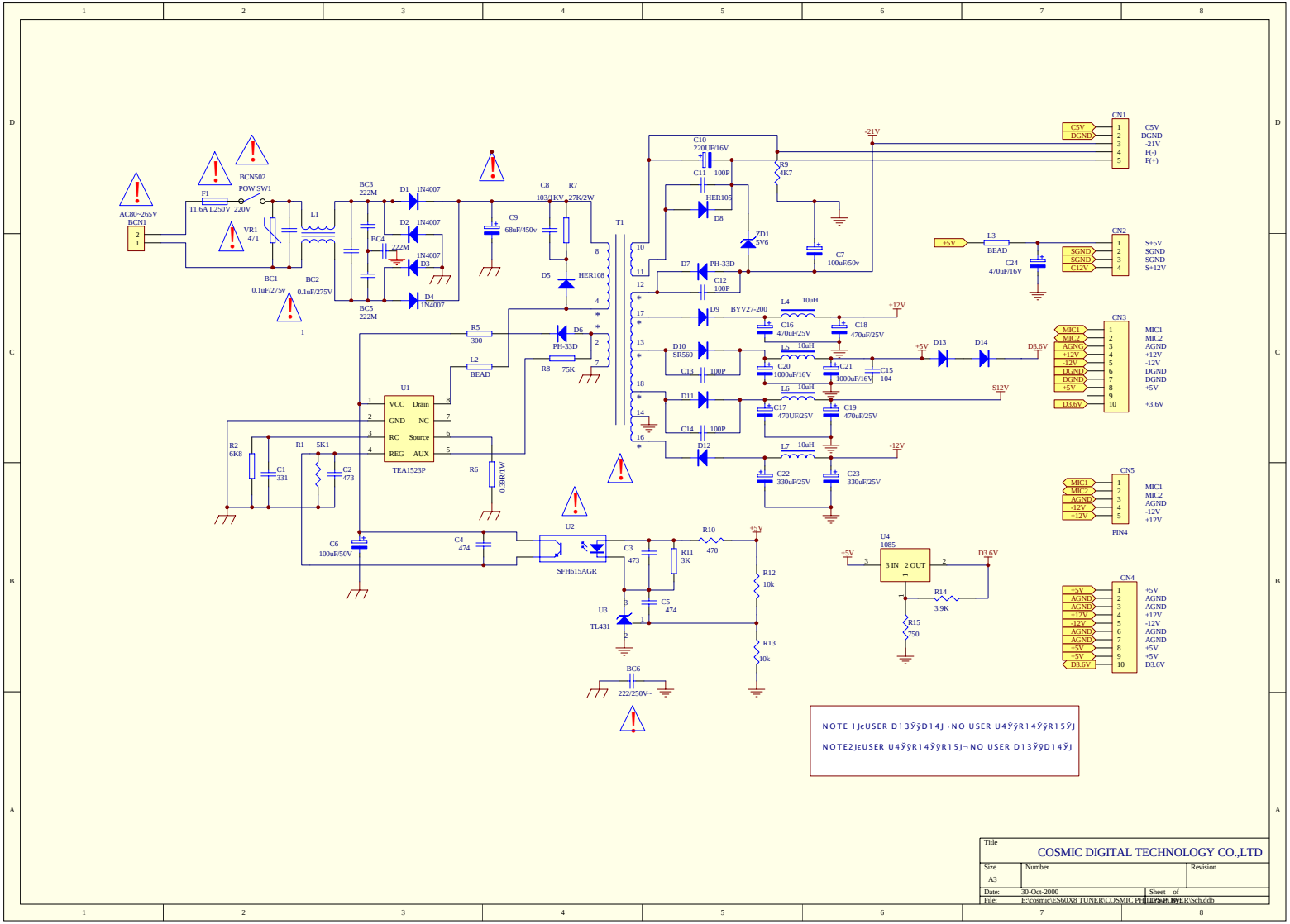
AC80~265V
BCN1
BCN502
POW SW1
F1
T1.6A L250V
220V
VR1
471
L1
BC1
0.1uF/275v
BC2
0.1uF/275V
BC3
222M
BC4
222M
BC5
222M
D1 1N4007
D2 1N4007
D3 1N4007
D4 1N4007
C9
68uF/450v
C8
103/1KV
R7
27K/2W
T1
D5
HER108
D6
PH-33D
R8
75K
R5
300
L2
BEAD
U1
VCC
Drain
GND
NC
RC
Source
REG
AUX
TEA1523P
R1
5K1
R2
6K8
C1
331
C2
473
R6
0.3R/1W
C6
100uF/50V
C4
474
U2
SFH615AGR
C3
473
R10
470
R11
3K
U3
TL431
C5
474
R12
10k
R13
10k
BC6
222/250V~
C10
220UF/16V
C11
100P
HER105
D8
R9
4K7
ZD1
5V6
C7
100uF/50v
-21V
D7
PH-33D
C12
100P
D9
BYV27-200
L4
10uH
C16
470uF/25V
C18
470uF/25V
+12V
D10
SR560
C13
100P
L5
10uH
C20
1000uF/16V
C21
1000uF/16V
C15
104
+5V
D13
D14
D3.6V
S12V
D11
L6
10uH
C17
470UF/25V
C19
470uF/25V
C14
100P
D12
L7
10uH
C22
330uF/25V
C23
330uF/25V
-12V
U4
1085
3 IN
2 OUT
R14
3.9K
R15
750
CN1
C5V
DGND
-21V
F(-)
F(+)
CN2
SGND
SGND
C12V
S+5V
SGND
SGND
S+12V
L3
BEAD
C24
470uF/16V
CN3
MIC1
MIC2
AGND
+12V
-12V
DGND
DGND
+5V
D3.6V
+3.6V
CN5
MIC1
MIC2
AGND
-12V
+12V
PIN4
CN4
+5V
AGND
AGND
+12V
-12V
AGND
AGND
+5V
+5V
D3.6V
NOTE 1JeUSER D13ŸÿD14J¬NO USER U4ŸÿR14ŸÿR15ŸJ
NOTE2JeUSER U4ŸÿR14ŸÿR15J¬NO USER D13ŸÿD14ŸJ
Title
COSMIC DIGITAL TECHNOLOGY CO.,LTD
Size
A3
Number
Revision
Date:
30-Oct-2000
Sheet of
File:
E:\cosmic\ES60X8 TUNER\COSMIC PHILIPS POWER\Sch.ddb

8. Wiring Diagram
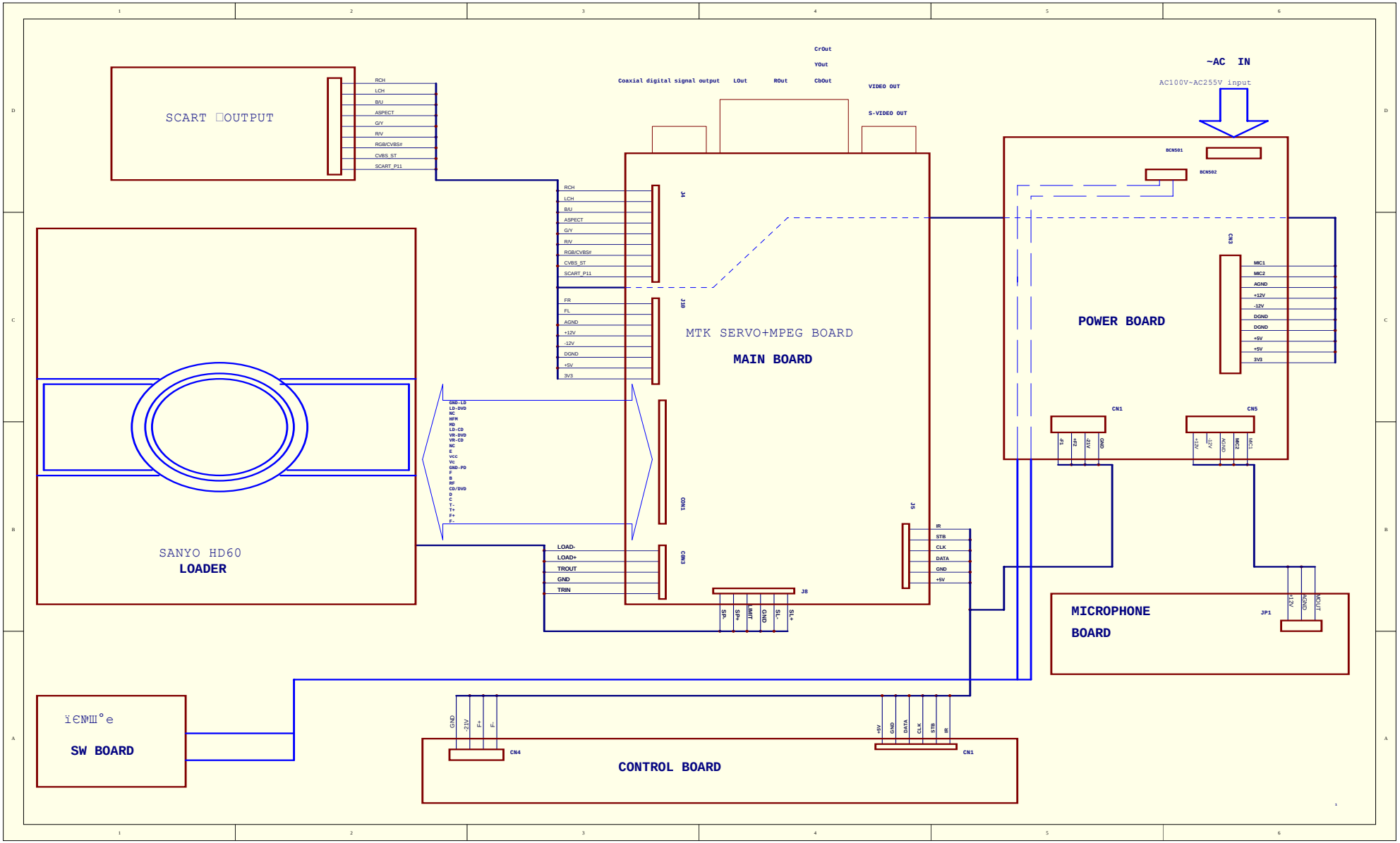
CO-01(DDV2141.DVD6722M.DVD5000.DVD412) WIRING DIAGRAM